Plate heat exchangers for refrigeration

Product catalogue for semi-welded and all-welded plate heat exchangers

Inside view

This product brochure is a collection of general technical information about the Alfa Laval semi-welded plate heat exchanger and all-welded plate heat exchanger (AlfaRex) designed for refrigeration duties.

Semi-welded

All-welded (AlfaRex)

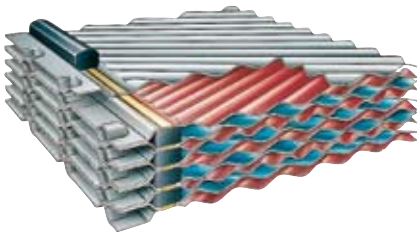

The channels for the refrigerant and the brine are sealed by laser welds and gaskets.

SWPHE as an evaporator in a brewery installation.

The complete range of Alfa Laval plates for SWPHE.

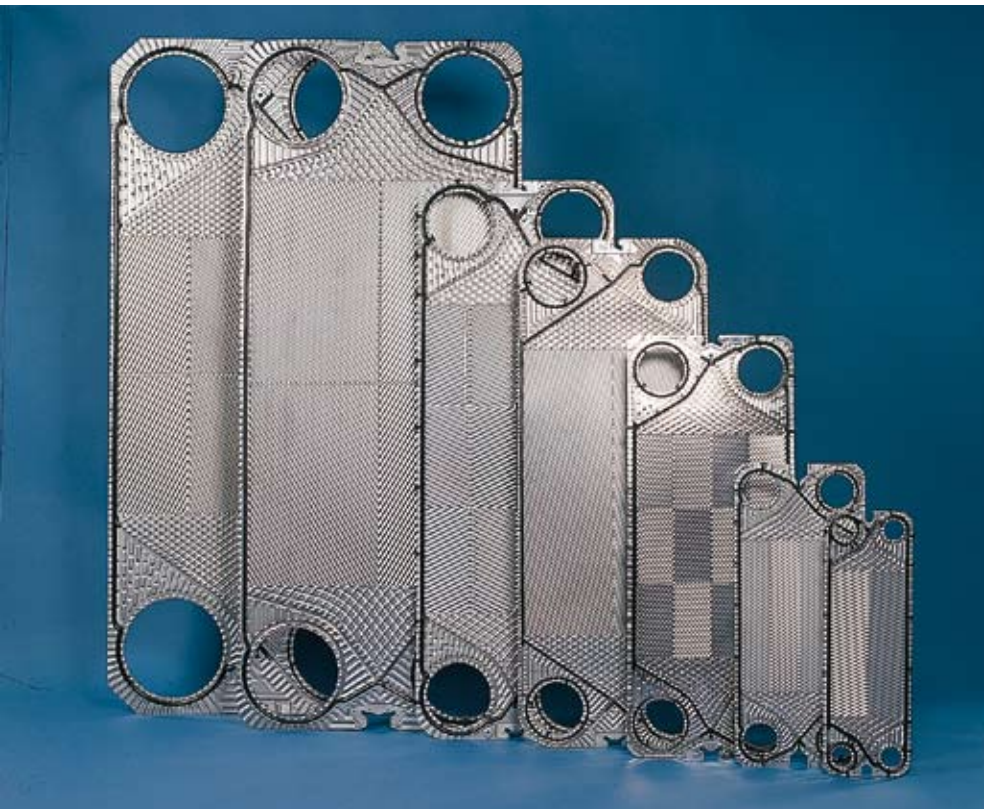

Semi-welded plate heat exchanger
The Alfa Laval semi-welded heat exchanger (SWPHE) alternates welded channels and traditional gasketed channels.

The refrigerant flows in welded channels and the only gaskets in contact with the refrigerant are two circular porthole gaskets between the welded plate pairs. These gaskets are made from highly resistant materials, attached for easy replacement by a glue-free construction.

The secondary medium flows in channels sealed by traditional elastomer gaskets.

Double sealing and corrosion resistant plate materials prevent intermixture of media, the absence of pressure-retaining seal welds and a flexible, yet vibration-resistant design.

Applications
The Alfa Laval semi-welded heat exchangers are used as evaporators and condensers for refrigeration systems in a whole series of applications, eg:

- Dairy, brewery and vineyard production
- Marine
- Fishing vessels and fish processing
- Slaughterhouses
- Chemical and pharmaceutical industries
- Ice manufacturing, ice-skating rinks
- Cold and frozen storage
- Food retail outlet

When the gasketed side is food approved it could be used in direct cooling of food liquids, eg. NH3/beer, juice or water.

Other application like heat pumps, organic rankine cycles and absorption systems could also request SWPHE for different duties.

Features
The SWPHE is very flexible and variable and can be arranged in Twin or two-units-in-one design, e.g. desuperheater/condenser, oilcooler/condenser.

These features gives the possibility to manufacture two duties in one frame at a lower cost, smaller volume and shorter footprint.

Disassembling and assembling possibilities
The plate heat exchanger concept allows the SWPHE to be opened and reclosed several times.

This makes assembly on site piece by piece possible, which is an advantage when transportation space is limited. It also allows opening the SWPHE for service.

Since all connections are normally located at one end, no pipework removal for service is necessary.

The heat transfer surface could also be augmented if the capacity is increased or if the temperature program is changed.

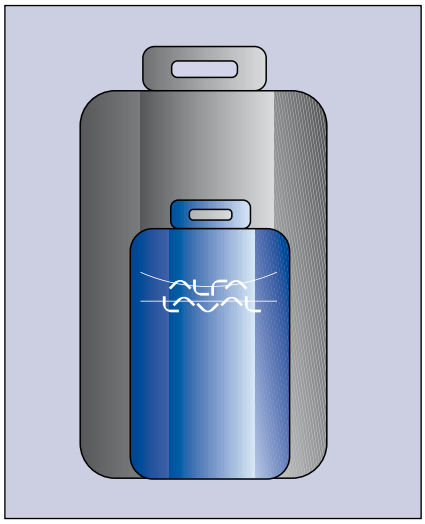

SWPHE becomes more compact and request a lower filling of refrigerant for the same duty.

Advantages

The plate heat exchanger concept, with flow-through channels formed by corrugated plates and the heat transfer taking place through the thin plates, is an extremely efficient heat exchange technique.

The turbulent flow, coupled with low fouling factors and high heat transfer coefficients, means that it is possible to operate with a small temperature difference in evaporating and chilled water temperatures. This in turn provides a good operational economy with high C.O.P. values.

It also means that a semi-welded plate heat exchanger becomes much more compact than a shell & tube heat exchanger for the same duty.

The practical advantages are:
- lower weight
- smaller space requirements
- lower refrigerant filling

Characteristics of cassettes

The cassettes are designed in three different angles of corrugation:

Low Theta = for higher flow and high temperature approach
Medium Theta = for medium flow and medium temperature approach
High Theta = for lower flow and low temperature approach

The Medium Theta cassette is a mixture of High and Low Theta plates. New plate cassettes in alternative material can be inserted when more corrosive cooling water is introduced.

The following plate materials are standard:
- AISI 304
- AISI 316

on request:
- Titanium
- Alloy 254
- Alloy C-276

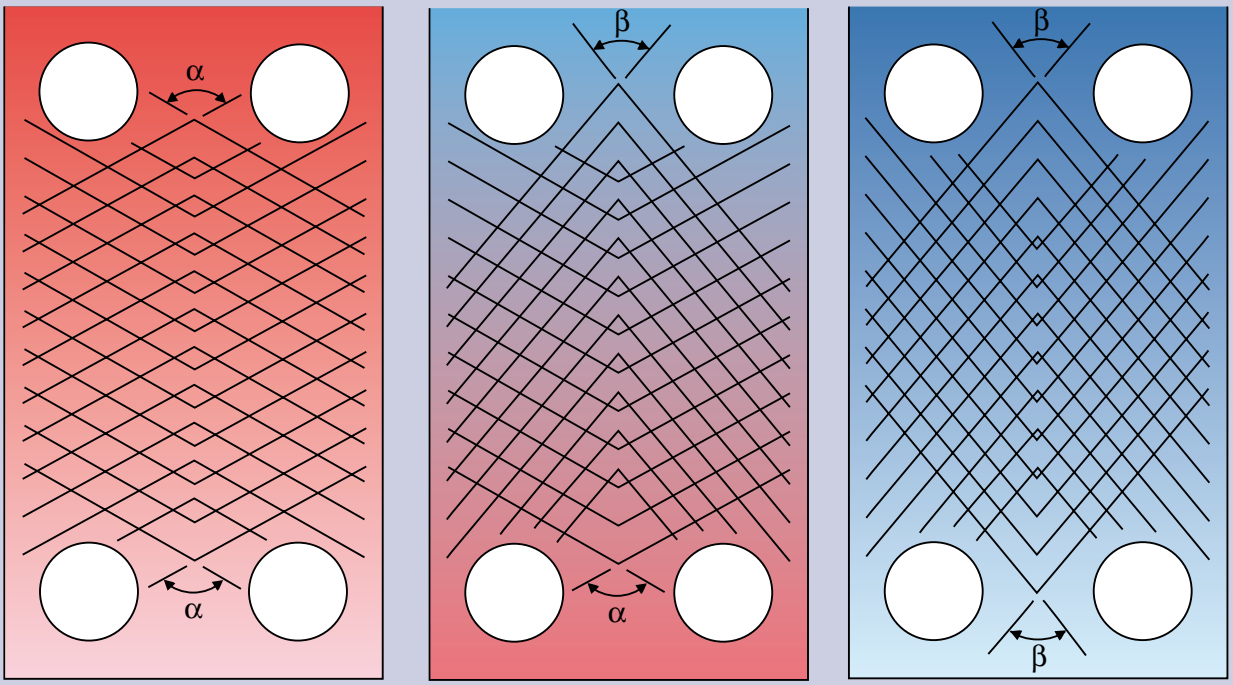

High Theta

Medium Theta $\alpha > \beta$

Low Theta

Mechanical aspects and freezing
The SWPHE is not sensitive to temperature shocks, and there is no vibration due to the small distance between the support points.

There is no pressure retaining welds in the SWPHE. Due to the turbulent flow, freezing risks are small, but the flexible design will accommodate expansion, and no damage will be caused should freezing occur.

Leak detection
Intermixing of media is not possible with the double sealing. The diagonal gaskets form the weakest components, and any leak will occur through a gasket, which is externally detectable for both media sides.

The Alfa Laval SWPHE is designed with no internal welds, and hence there will be no internal leaks.

Guarantee and maintenance
The guarantee for the SWPHE is 12 months from the delivery date. The guarantee is not valid if the unit is operated under conditions other than those specified. It is very important that the unit is installed and set up according to the instructions.

Gasket replacement of SWPHE will be recommended for evaporator/condenser at an interval of 5/4 years for ring gaskets and 10/8 years for field gaskets.

In case of fouling growth, the SWPHE can be cleaned by CIP on site. A mobile CIP could be docked to the unit and then circulate CIP liquid.

For more thorough service the cassettes can be sent in for total reconditioning, where the gaskets will be removed, the cassette cleaned and new gaskets provided.

Approvals and pressure vessel codes
Local countries limitations, requirements and additionals based on NH_3 services.

Due to flexible design, no damage will occur when freezing.

Country of destination	Pressure vessel authority	Approval required	Pre-approval available	Accepted design code	Inspection authority	Design temperature		Test pressure DP x factor
						LT °C min.	HT °C max.	
Europe*	CE/PED	Yes	Yes	SPVC	Cat 1-4: self or DNV	-45	120	1.43
Europe**	CE/PED	Yes	Yes	SPVC	Cat 1-4: self or DNV	-45	120	1.43
Germany	CE/PED/AD2000	Yes	Yes	AD2000	Cat 1-4: self or DNV	-45	120	1.43
Switzerland	CE/PED	Yes	Yes	SPVC	Cat 1-4: self or DNV	-45	120	1.43
Norway	CE/PED	Yes	Yes	SPVC	Cat 1-4: self or DNV	-45	120	1.43
Russia	GOST	Yes	Yes	SPVC	DNV	-45	120	1.43
South Africa	CE/PED		Yes	SPVC	DNV	-45	120	1.43
USA	ASME	Yes	Not appl.	ASME VIII	ASME agency	-45	120	1.3
Canada	CSA	Yes	Yes	ASME VIII	CSA agency	-45	120	1.3
Brazil			No	SPVC/ASME VIII	O.R. DNV	-45	120	1.3
India			No	SPVC	O.R. DNV	-45	120	1.3
Japan	HPGL	Yes	Yes	KHK	KHK	-45	120	1.3
Australia	AS1210			ASME VIII/SPVC		-45	120	1.5
New Zealand	AS1210			ASME VIII/SPVC		-45	120	1.5
China	CE/PED+SQL			SPVC	DNV	-45	120	1.43

O.R. = on request / LP = low pressure / HP = high pressure / LT = low temperature / HT = high temperature / DP = design pressure
The low and high temperatures are gasket limited temperatures.
Marine approvals are on request.

*) 15 W European EU
**) 10 new European EU 2004

Models		M6-MW	M10-BW	MK15-BW	T20-BW	T20-MW
FGR / FG		(FGR)	(FGR)	(FGR)	(FG)	(FG)
Max. design pressure/Test pressure	bar	16/23	on request	16/23	16/23	16/23
Standard temperature	ºC	-10/120	on request	-10/120	-10/120	-10/120
Low temperature	ºC	-45/50	on request	-45/50	-45/50	-45/50
FDR / REF / FS / FT		(FDR)	(FDR, REF) [FT]	(FDR)	(FS)	(FS)
Max. design pressure/Test pressure	bar	25/36	25/36 [40/57.2]	30/43	32/45.8	25/36
Standard temperature	ºC	-10/120	-10/120	-10/120	-10/120	-10/120
Low temperature	ºC	-45/50	-45/50	-45/50	-45/50	-45/50

Alloy 304 - 0.6 mm						
Max. design press./Test press. gasket side		on request	25.2/36	25.2/36	22.4/32	on request
Max. design press./Test press. welded side		on request	29/41.5	29.4/42	28/40	on request
Cassette weight	kg	on request	3.00	5.64	on request	on request
Alloy 316 - 0.6 mm						
Max. design press./Test press. gasket side		21.7/31	25.2/36	25.2/36	22.4/32	18.9/27
Max. design press./Test press. welded side		29/41.5	29/41.5	29.4/42	28.40	21/31
Cassette weight	kg	1.80	3.00	5.64	9.5	10.1
Alloy 316 - 0.7 mm						
Max. design press./Test press. gasket side		on request	on request	on request	on request	21.7/31
Max. design press./Test press. welded side		on request	on request	on request	on request	25.2/36
Cassette weight	kg	on request	on request	on request	on request	11.6
Alloy 316 - 0.8 mm						
Max. design press./Test press. gasket side		on request	25.2/36	on request	on request	on request
Max. design press./Test press. welded side		on request	40/57.2	on request	on request	on request
Cassette weight	kg	on request	on request	on request	on request	on request
Alloy 254 - 0.6 mm						
Max. design press./Test press. gasket side		on request	25.2/36	25.2/36	22.4/32	18.9/27
Max. design press./Test press. welded side		on request	29/41.5	29.4/42	28/40	21/31
Cassette weight	kg	on request	3.00	5.64	9.5	10.1
Alloy C276 - 0.6 mm						
Max. design press./Test press. gasket side		on request	25.2/36	25.2/36	on request	18.9/27
Max. design press./Test press. welded side		on request	29/41.5	29.4/42	on request	21/31
Cassette weight	kg	on request	3.00	5.64	on request	10.1
Titanium - 0.6 mm						
Max. design press./Test press. gasket side		18.2/26	18.2/26	18.2/26	16.8/24	14.7/21
Max. design press./Test press. welded side		22.4/32	22.4/32	22.4/32	22.4/32	16/23
Cassette weight	kg	1.10	1.75	3.28	5.56	6.10
Titanium - 0.7 mm						
Max. design press./Test press. gasket side		on request	21.7/31	21.7/31	25.2/36	21.7/27
Max. design press./Test press. welded side		on request	25.2/36	25.2/36	28/40	21.7/31
Cassette weight	kg	on request	on request	3.79	6.3	6.90
Titanium - 0.8 mm						
Max. design press./Test press. gasket side		on request	on request	on request	on request	21.7/31
Max. design press./Test press. welded side		on request	on request	on request	on request	25.2/36
Cassette weight	kg	on request	on request	on request	on request	7.90

Area / Plate	m^2	0.124	0.24	0.46	0.81	0.85
Volume / Channel	l	0.40	0.63	1.27	2.34	3.67
Free channel	mm	2.80	2.40	2.50	2.50	4.00

The low and high temperatures are gasket limited temperatures.
The design pressure of the unit is limited to the frame.

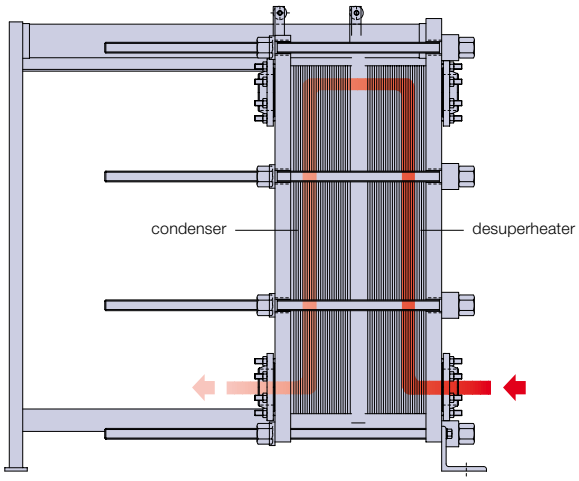

Condenser and desuperheater arranged in the same frame.

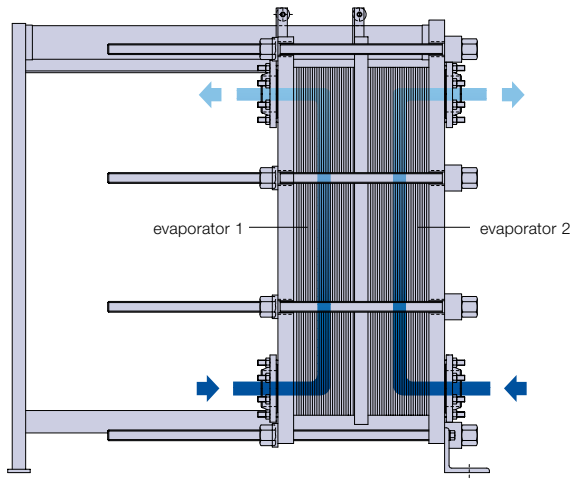

Two evaporators or condensers, also in different size, arranged in the same frame.

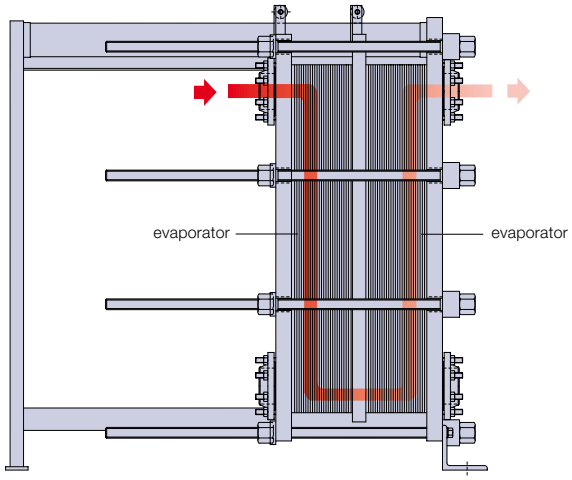

Multipass evaporator for cooling of media in two stages.

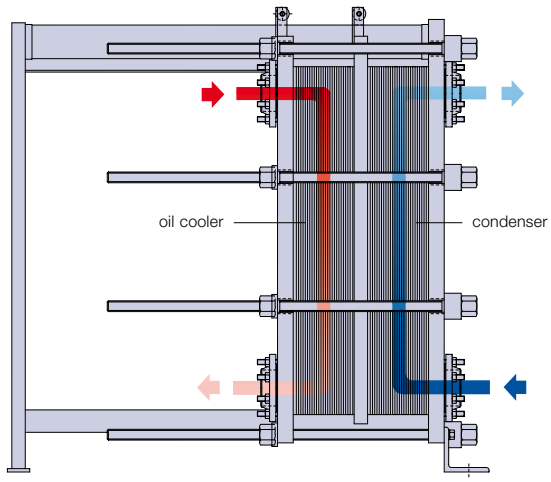

Oil cooler and condenser arranged in the same frame.

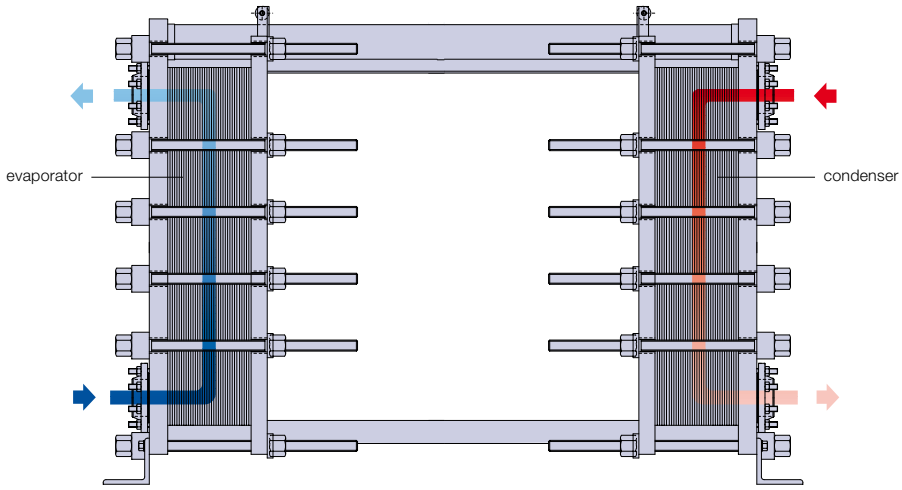

Evaporator and condenser arranged in a Twin frame.

Refrigerant on welded side
Refrigerant mixed with normal compressor oil – type mineral oil with low aromatic contents (synthetic oils have to be checked).

For special operation cases like:
- temporary high temperature changes
- cleaning by CIP at high temperature
- other media than R22, NH_3 or water like brines.

Please contact Alfa Laval technical support.

NH_3 + Oil
Ring gaskets, welded side

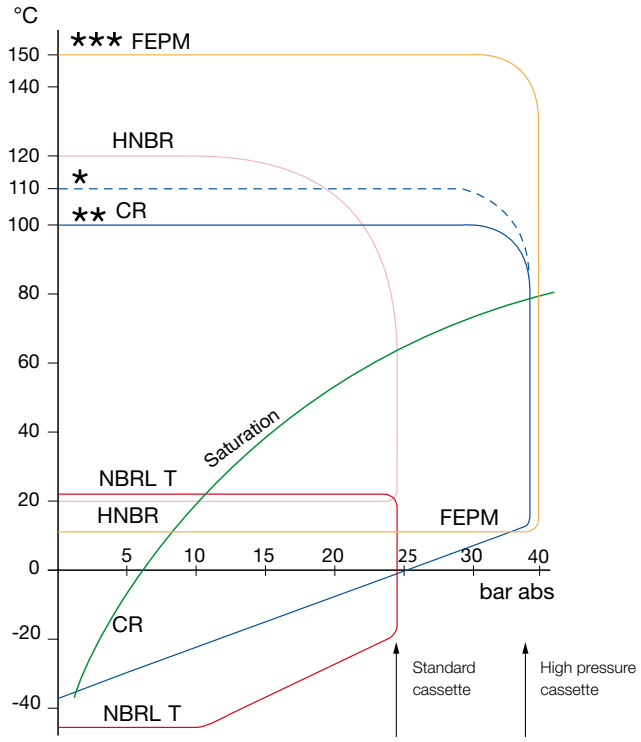

R22 + Oil
Ring gaskets, welded side
For higher R22 temperatures please contact Alfa Laval for support.

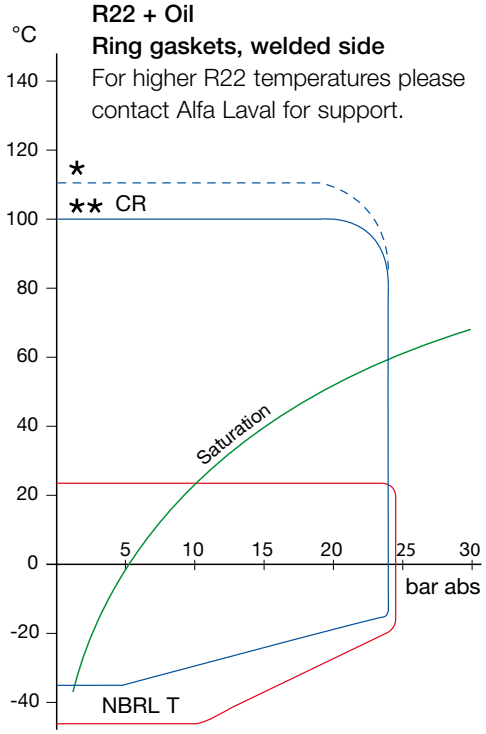

Water like media
Gasketed side

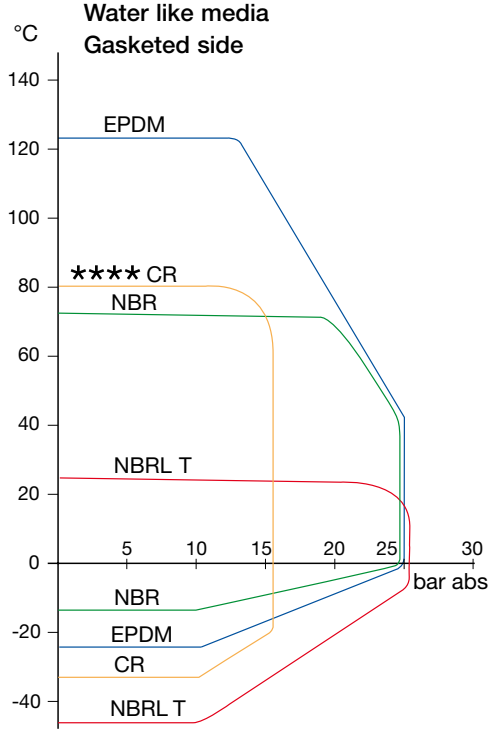

* M10-BW, MK15-BW
** M6-MW, T20-MW, T20-BW, MA30-W
*** M10-BW
**** M10-BW NH_3 for chilling/freezing in cascade

N° of cassettes			15	25	35	45	55
Nominal data	Qn	kW	60	100	135	155	170
Ethylene Glycol = 30% Ti = -2°C To = -6°C	Wn	m³/h	14.7	24.5	33.1	37.9	41.6
Refrigerant = NH_3 Te = -10°C	Δp glycol	bar	0.62	0.62	0.61	0.53	0.48
	Δp NH_3	kPa	6.6	6.8	6.9	6.6	6.3

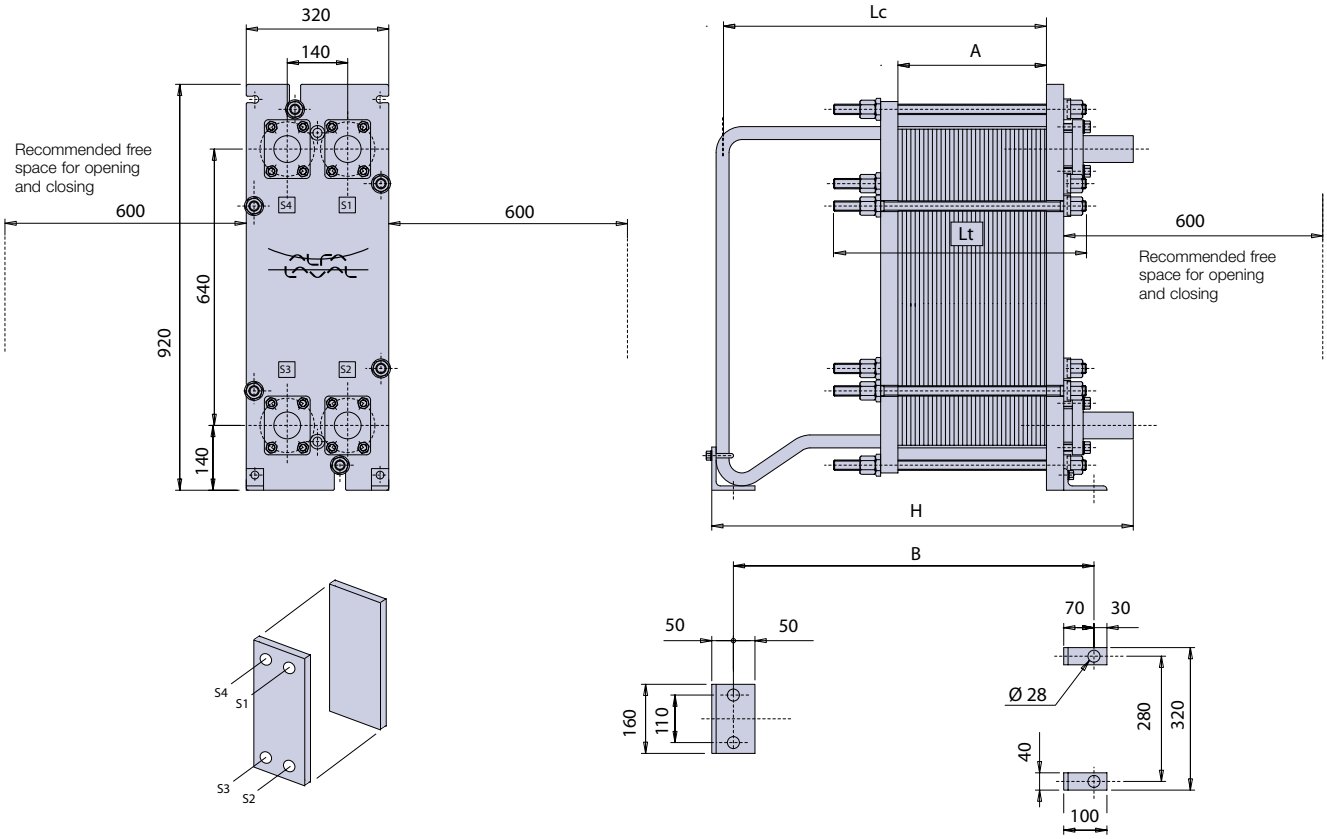

N° of cassettes, 0.6 mm			< 11	< 28	< 45	< 67	< 90	< 125
DIMENSIONS	A	mm	75	150	305	455	612	880
	Lc	mm	350	550	550	750	950	1400
	Lt	mm	200	350	500	700	900	1300
	H	mm	550	750	750	950	1150	1600
	B	mm	545	745	745	945	1145	1595
	Connection	mm	OD 62	OD 62	OD 62	OD 62	OD 62	OD 62
DATA	V_{H_2O}	dm^3	3.6	9.6	15.6	21.6	27.6	40.8
	V_{NH_3}	dm^3	4	10	16	22	28	42
	W_0	kg	186	216	247	286	328	392

S1 Outlet water
S2 Inlet water
S3 Inlet refrigerant
S4 Outlet refrigerant

Ti Glycol inlet temperature
Tu Glycol outlet temperature
Te Evaporation temperature
Qn Nominal capacity

Wn Glycol nominal flow
Δp glycol Glycol pressure drop
Δp NH3 Ammonia pressure drop
Wo Operating weight

V H20 Water volume
V NH3 Ammonia volume

N° of cassettes			20	30	40	50	60	70
Nominal data	Qn	kW	115	180	240	300	360	415
Ethylene Glycol = 30% Ti = -2°C To = -6°C	Wn	m^3/h	28.2	44.1	58.8	73.4	88.4	101.6
Refrigerant = NH_3 Te = -10°C	Δp glycol	bar	0.72	0.76	0.76	0.77	0.78	0.78
	Δp NH_3	kPa	5.4	5.7	5.8	5.9	6.1	6.2

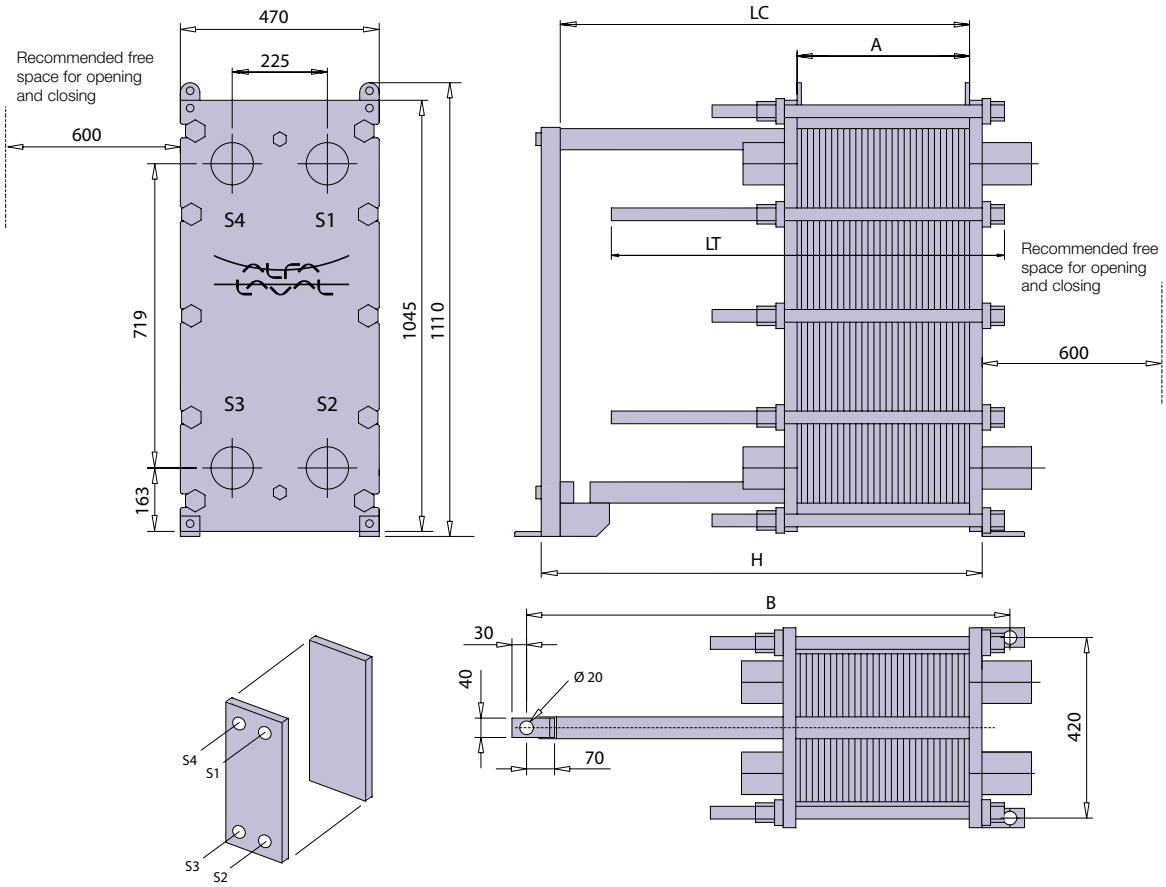

N° of cassettes, 0.6 mm			< 22	< 60	< 95	< 132	< 165	< 232
DIMENSIONS	A	mm	132	360	570	792	990	1392
	Lc	mm	300	650	900	1250	1600	2100
	Lt	mm	450	750	1050	1350	1650	1950
	H	mm	555	905	1155	1505	1885	2355
	B	mm	490	840	1090	1440	1790	2290
	Connection	mm	DN 100	DN 100	DN 100	DN 100	DN 100	DN 100
DATA	V_{H_2O}	dm^3	14.9	38.8	60.9	84.2	104.9	147.2
	V_{NH_3}	dm^3	13.3	37.3	59.3	82.6	103.4	145.6
	W_0	kg	437	615	814	1002	1078	1361

S1 Outlet water
S2 Inlet water
S3 Inlet refrigerant
S4 Outlet refrigerant

Ti Glycol inlet temperature
Tu Glycol outlet temperature
Te Evaporation temperature
Qn Nominal capacity

Wn Glycol nominal flow
Δp glycol Glycol pressure drop
Δp NH3 Ammonia pressure drop
Wo Operating weight

V H20 Water volume
V NH3 Ammonia volume

M10-BW FT REF

N° of cassettes			20	30	40	50	60	70
Nominal data Tgas, in = 50°C Tc (CO_2) = -8°C Te (NH_3) = -12°C	Qn	kW	55	85	120	145	175	205
	Wn	m^3/h	218	337	475	575	693	812
	Δp NH_3	kPa	3.6	3.6	3.8	3.7	3.8	3.9

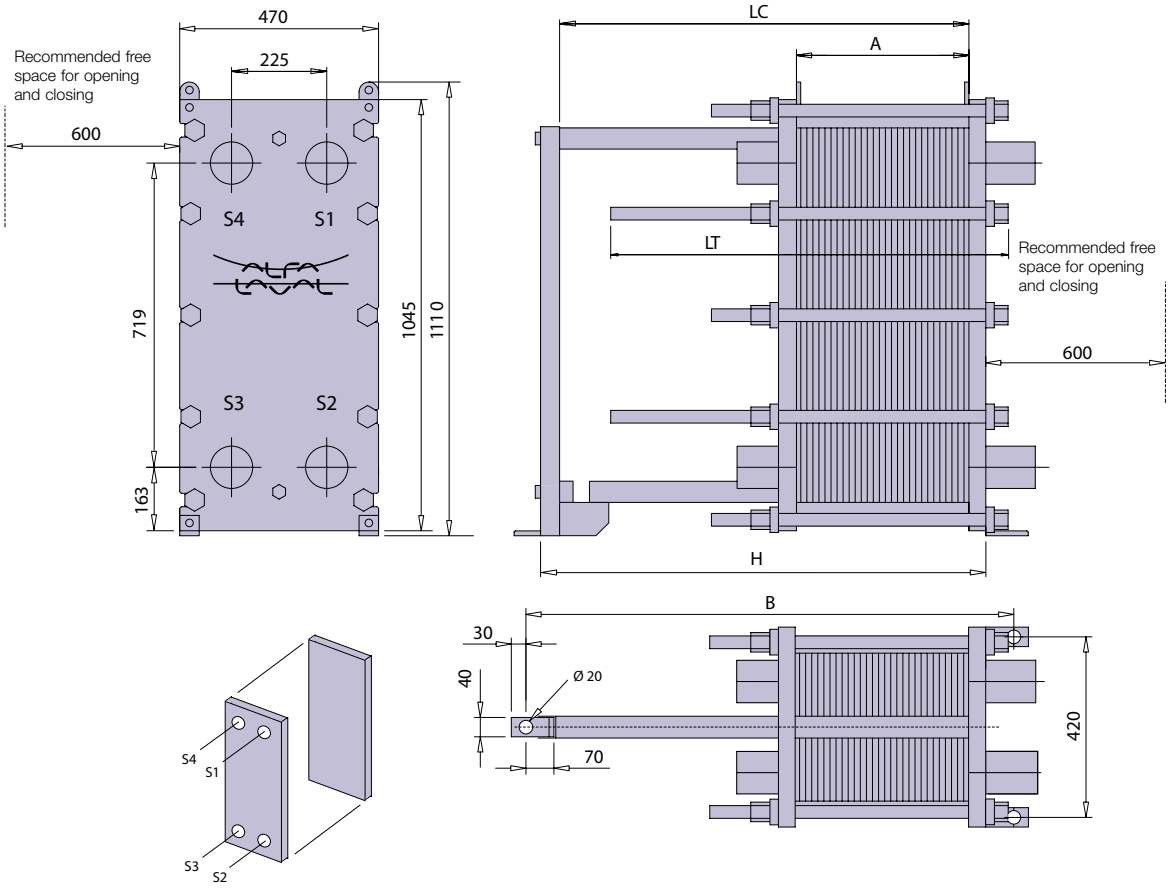

N° of cassettes, 0.8 mm			< 18	< 54	< 87	< 121	< 152	< 215
DIMENSIONS	A	mm	114	346	557	775	973	1376
	Lc	mm	300	650	900	1250	1600	2100
	Lt	mm	450	750	1050	1350	1650	1950
	H	mm	570	920	1170	1505	1900	2370
	B	mm	505	855	1105	1455	1805	2305
	Connection	mm	DN 100	DN 100	DN 100	DN 100	DN 100	DN 100
DATA	V_{H_2O}	dm^3	12.31	35.01	55.81	77.21	96.81	136.41
	V_{NH_3}	dm^3	10.81	33.51	54.31	75.71	95.21	134.91
	W_0	kg	553	729	885	1059	1372	1522

S1 Outlet NH_3
S2 Inlet NH_3
S3 Outlet CO_2
S4 Inlet CO_2

Tc CO_2 condensing temperature
Te Evaporation temperature
Qn Nominal capacity
Δp NH3 Ammonia pressure drop

Wo Operating weight
V H20 CO_2 volume
V NH3 Ammonia volume

N° of cassettes			30	40	50	60	70	80
Nominal data	Qn	kW	340	460	580	690	800	900
Ethylene Glycol = 30% Ti = -2°C To = -6°C	Wn	m^3/h	83.2	112.6	142.0	168.9	195.8	220.3
Refrigerant = NH_3 Te = -10°C	Δp glycol	bar	0.90	0.92	0.94	0.96	0.96	0.97
	Δp NH_3	kPa	6.8	7.0	7.2	7.3	7.4	7.5

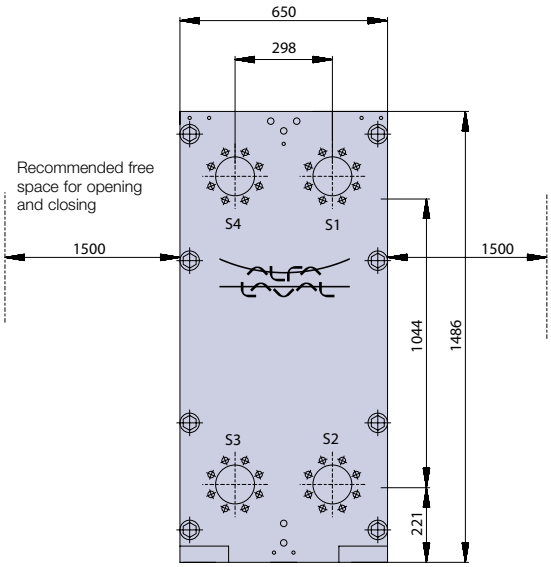

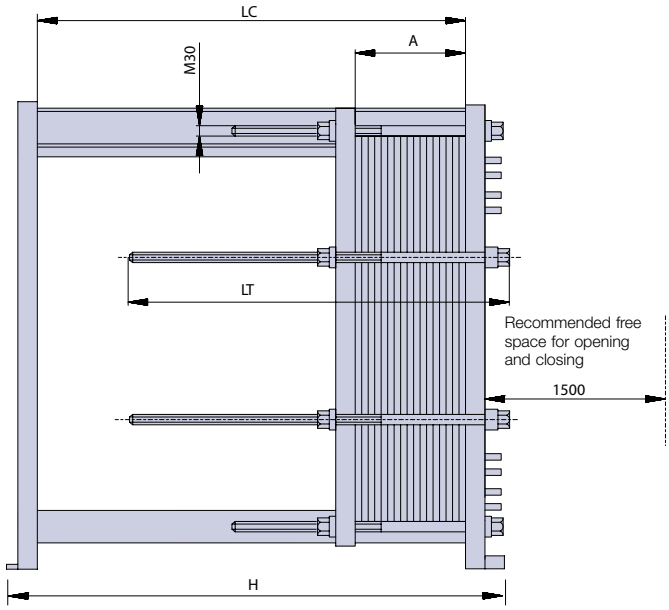

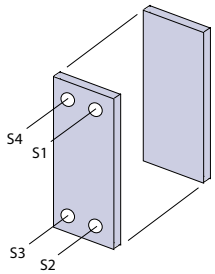

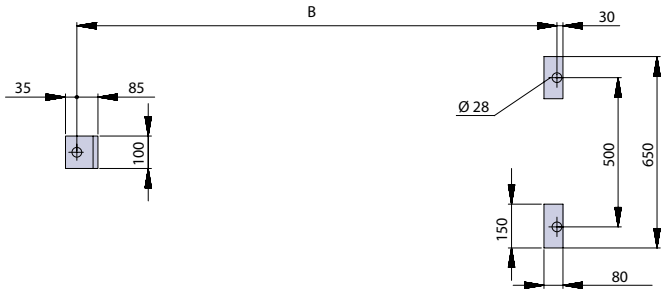

N° of cassettes, 0.6 mm			< 37	< 66	< 94	< 121	< 179	< 215
DIMENSIONS	A	mm	229	409	583	750	1100	1333
	Lc	mm	900	1200	1500	1800	2400	2800
	Lt	mm	750	1050	1350	1650	2250	2850
	H	mm	1200	1500	1800	2100	2700	3100
	B	mm	1095	1395	1695	1995	2595	2995
	Connection	mm	DN 150	DN 150	DN 150	DN 150	DN 150	DN 150
DATA	V_{H_2O}	dm^3	44.4	81.3	116.8	151.1	224.8	270.5
	V_{NH_3}	dm^3	45.7	82.6	118.1	152.4	226.1	271.8
	W_0	kg	1190	1420	1640	1850	2300	2540

S1 Outlet water
S2 Inlet water
S3 Inlet refrigerant
S4 Outlet refrigerant

Ti Glycol inlet temperature
Tu Glycol outlet temperature
Te Evaporation temperature
Qn Nominal capacity

Wn Glycol nominal flow
Δp glycol Glycol pressure drop
Δp NH3 Ammonia pressure drop
Wo Operating weight

V H20 Water volume
V NH3 Ammonia volume

N° of cassettes			30	40	50	60	70	80
Nominal data	Qn	kW	620	850	1050	1250	1430	1630
Ethylene Glycol = 30% Ti = -2°C To = -6°C	Wn	m^3/h	144	197.8	244.4	290.9	332.8	379.3
Refrigerant = NH_3 Te = -10°C	Δp glycol	bar	0.96	0.96	0.97	0.97	0.98	0.99
	Δp NH_3	kPa	6.7	7.0	6.9	7.0	6.9	7.0

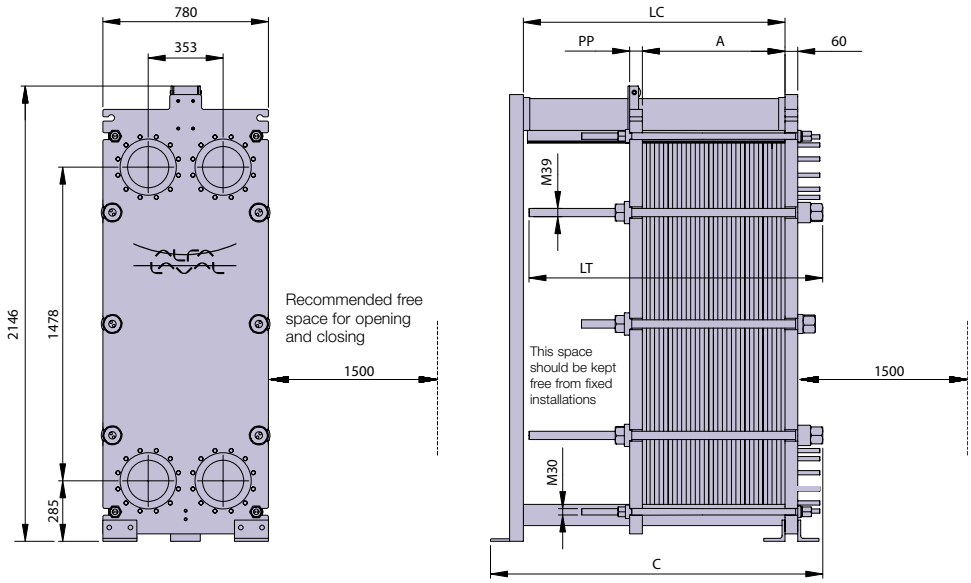

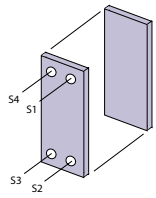

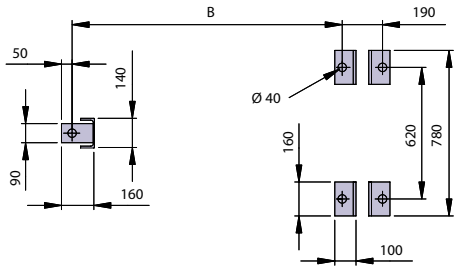

N° of cassettes, 0.6 mm			< 30	< 58	< 113	< 168	< 223	< 279
DIMENSIONS	A	mm	188	362	703	1044	1385	1726
	Lc	mm	900	1200	1800	2400	3000	3600
	Lt	mm	750	1050	1650	2250	2850	3450
	C	mm	1235	1535	2135	2735	3335	3935
	B	mm	940	1240	1840	2440	3040	3640
	Connection	mm	DN 200	DN 200	DN 200	DN 200	DN 200	DN 200
DATA	V_{H_2O}	dm^3	68.0	133.6	262.3	391	519.7	648.4
	V_{NH_3}	dm^3	70.4	135.9	264.6	393.3	522	650.7
	W_0	kg	1904	2270	2992	3715	4439	5162

S1 Outlet water
S2 Inlet water
S3 Inlet refrigerant
S4 Outlet refrigerant

Ti Glycol inlet temperature
Tu Glycol outlet temperature
Te Evaporation temperature
Qn Nominal capacity

Wn Glycol nominal flow
Δp glycol Glycol pressure drop
Δp NH_3 Ammonia pressure drop
Wo Operating weight

V H_2O Water volume
V NH_3 Ammonia volume

N° of cassettes			30	40	50	60	70	80
Nominal data	Qn	kW	590	790	1000	1180	1350	1500
Ethylene Glycol = 30% Ti = -2°C To = -6°C	Wn	m^3/h	144.4	193.4	244.8	288.9	330.5	367.5
Refrigerant = NH_3 Te = -10°C	Δp glycol	bar	0.48	0.48	0.5	0.49	0.49	0.47
	Δp NH_3	kPa	4.7	4.8	4.9	4.9	5.0	5.0

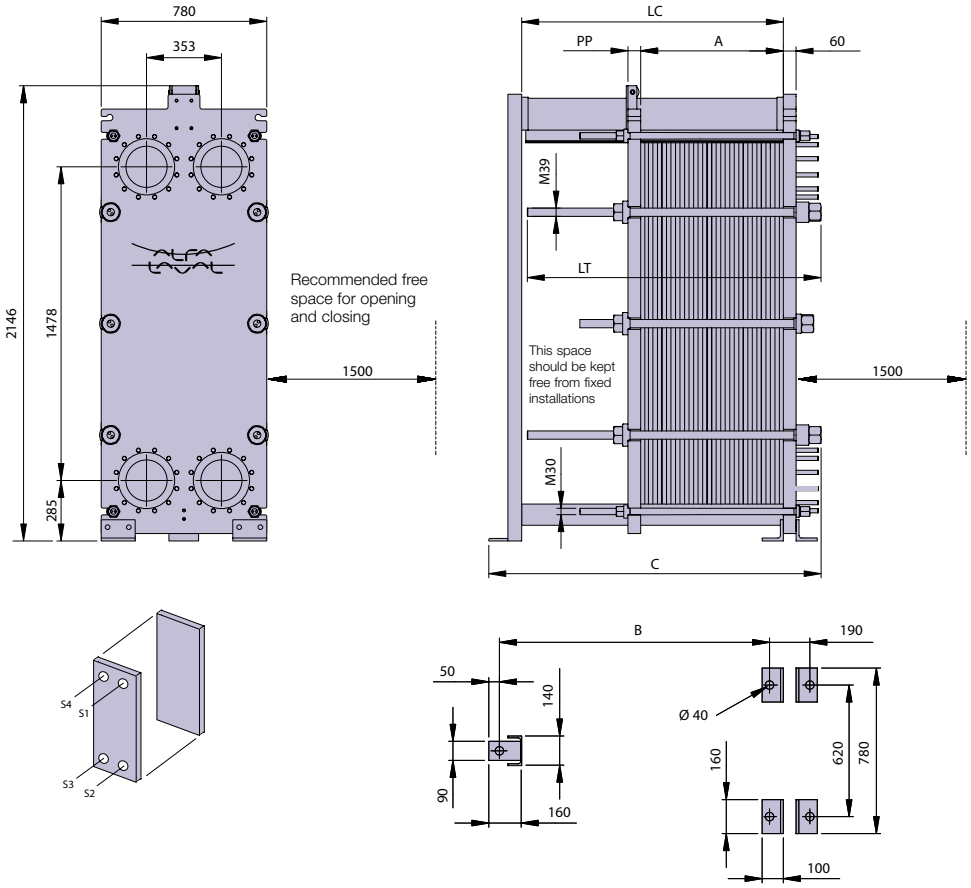

N° of cassettes, 0.6 mm			< 27	< 52	< 101	< 150	< 199	< 248
DIMENSIONS	A	mm	229	409	583	750	1100	1333
	Lc	mm	900	1200	1800	2400	3000	3600
	Lt	mm	750	1050	1650	2250	2850	3450
	C	mm	1235	1535	2135	2735	3335	3935
	B	mm	945	1245	1845	2445	3045	3645
	Connection	mm	DN 200	DN 200	DN 200	DN 200	DN 200	DN 200
DATA	V_{H_2O}	dm^3	91.8	183.5	363.3	543.2	723	902.8
	V_{NH_3}	dm^3	95.4	187.2	367	546.8	726.7	906.5
	W_0	kg	1910	2300	3060	3820	4580	5360

S1 Outlet water
S2 Inlet water
S3 Inlet refrigerant
S4 Outlet refrigerant

Ti Glycol inlet temperature
Tu Glycol outlet temperature
Te Evaporation temperature
Qn Nominal capacity

Wn Glycol nominal flow
Δp glycol Glycol pressure drop
Δp NH3 Ammonia pressure drop
Wo Operating weight

V H20 Water volume
V NH3 Ammonia volume

M6-MW FDR

N° of cassettes			20	30	40	50	60
Cooling tower	Qn	kW	110	170	230	270	290
Ti = 29.5°C	Wn	m^3/h	17.2	26.6	36.0	40.1	40.9
Tc = 38.5°C	$\Delta p\ H_2O$	bar	0.43	0.47	0.53	0.47	0.39
City water	Qn	kW	105	160	210	270	300
Ti = 15°C	Wn	m^3/h	13.9	21.1	27.7	35.7	39.6
Tc = 25°C	$\Delta p\ H_2O$	bar	0.29	0.31	0.32	0.38	0.37

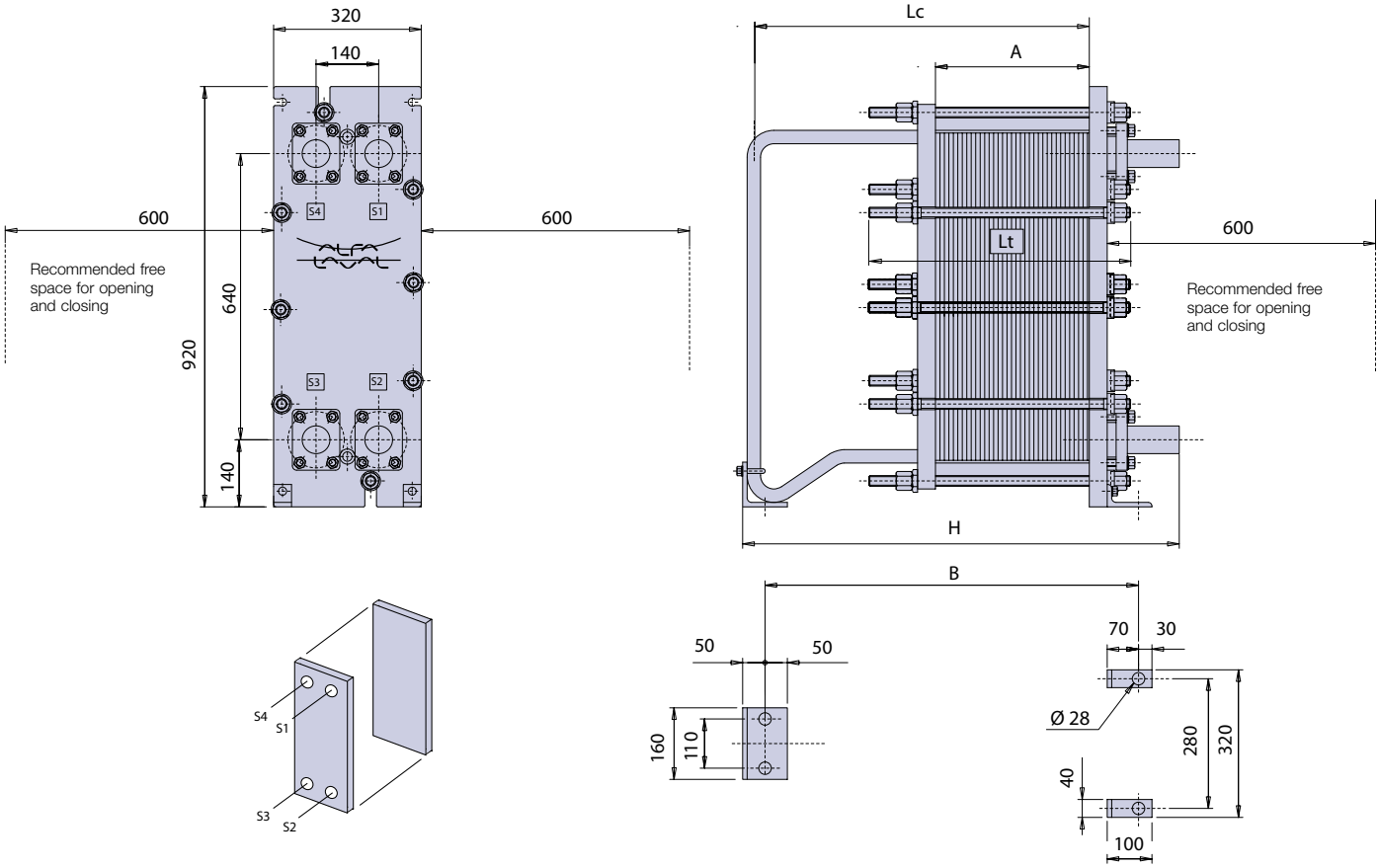

N° of cassettes, 0.6 mm			< 18	< 26	< 54	< 70	< 92	< 125
DIMENSIONS	A	mm	122	177	367	476	626	850
	Lc	mm	350	550	750	750	950	1400
	Lt	mm	260	335	585	725	935	1300
	H	mm	610	810	1010	1010	1210	1775
	B	mm	455	655	855	855	1055	1595
	Connection	mm	OD 62	OD 62	OD 62	OD 62	OD 62	OD 62
DATA	V_{H_2O}	dm^3	6.6	9.6	21.6	27.6	36.8	40.8
	V_{NH_3}	dm^3	7	10	22	29	39	42
	W_0	kg	200	214	265	293	333	392

S1 Outlet water
S2 Inlet water
S3 Outlet refrigerant
S4 Inlet refrigerant
Ti Water inlet temperature
Tc Condensing temperature
Qn Nominal capacity
Wn Water nominal flow
$\Delta p\ H_2O$ Water pressure drop
W_0 Operating weight
$V\ H_2O$ Water volume
$V\ NH_3$ Ammonia volume

N° of cassettes			20	30	40	50	60	70
Cooling tower	Qn	kW	215	330	440	560	680	780
Ti = 29.5°C	Wn	m^3/h	33.7	51.7	68.9	87.7	106.5	122.1
Tc = 38.5°C	$\Delta p\ H_2O$	bar	0.80	0.83	0.83	0.86	0.91	0.91

City water	Qn	kW	220	340	460	570	690	810
Ti = 15°C	Wn	m^3/h	29.1	44.9	60.8	75.3	91.1	107
Tc = 25°C	$\Delta p\ H_2O$	bar	0.60	0.63	0.65	0.65	0.67	0.70

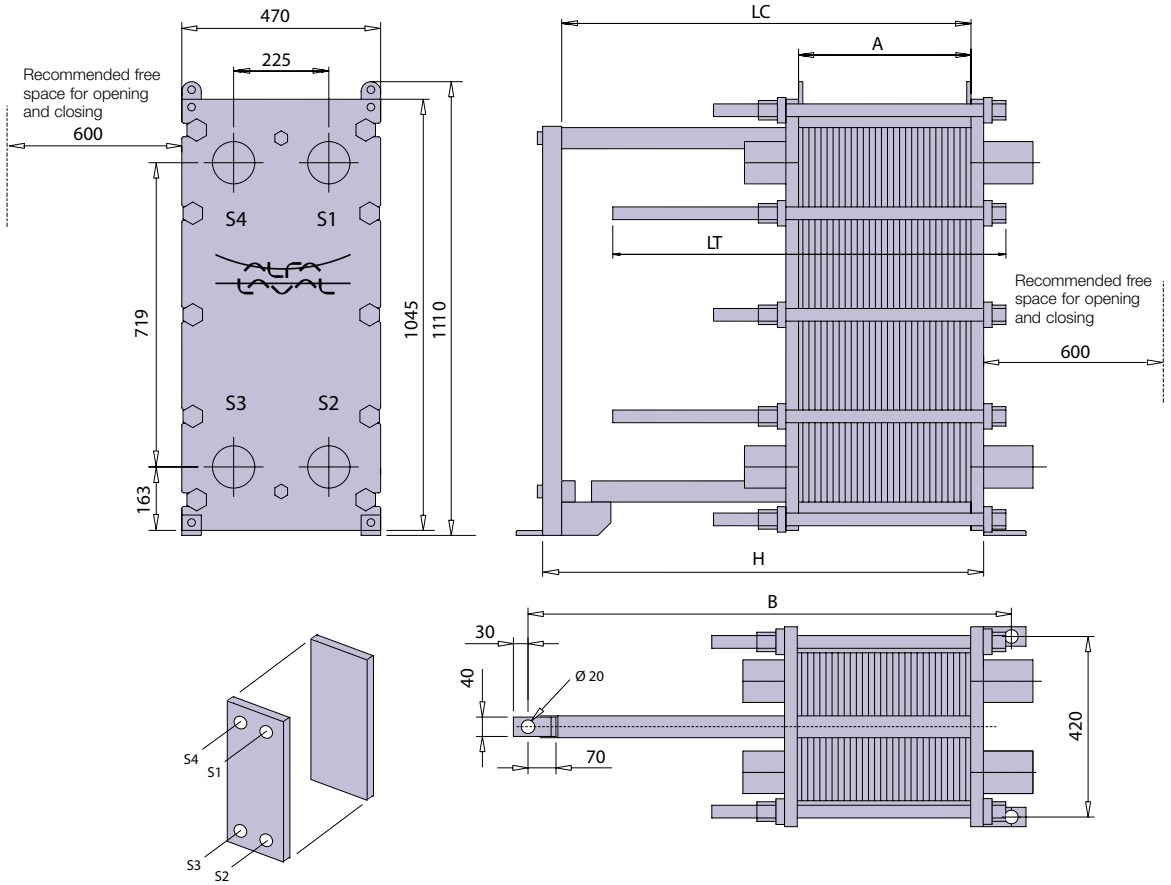

N° of cassettes, 0.6 mm			< 22	< 60	< 95	< 132	< 165	< 232
DIMENSIONS	A	mm	132	360	570	792	990	1392
	Lc	mm	300	650	900	1250	1600	2100
	Lt	mm	450	750	1050	1350	1650	1950
	H	mm	555	905	1155	1505	1885	2355
	B	mm	490	840	1090	1440	1790	2290
	Connection	mm	DN 100	DN 100	DN 100	DN 100	DN 100	DN 100
DATA	V_{H_2O}	dm^3	14.9	38.8	60.9	84.2	104.9	147.2
	V_{NH_3}	dm^3	13.3	37.3	59.3	82.6	103.4	145.6
	W_0	kg	437	615	814	1002	1078	1361

S1 Outlet water
S2 Inlet water
S3 Inlet refrigerant
S4 Outlet refrigerant

Ti Glycol inlet temperature
Tu Glycol outlet temperature
Te Evaporation temperature
Qn Nominal capacity

Wn Glycol nominal flow
Δp glycol Glycol pressure drop
Δp NH3 Ammonia pressure drop
Wo Operating weight

V H20 Water volume
V NH3 Ammonia volume

M10-BW FDR

N° of cassettes			20	30	40	50	60	70	80	90
Cooling tower	Qn	kW	215	330	440	560	680	780	890	1010
Ti = 29.5°C	Wn	m^3/h	33.7	51.7	68.9	87.7	106.5	122.1	139.3	158.1
Tc = 38.5°C	$\Delta p\ H_2O$	bar	0.80	0.83	0.83	0.86	0.91	0.91	0.93	0.99

City water	Qn	kW	220	340	460	570	690	810	920	1040
Ti = 15°C	Wn	m^3/h	29.1	44.9	60.8	75.3	91.1	107.0	121.5	137.4
Tc = 25°C	$\Delta p\ H_2O$	bar	0.60	0.63	0.65	0.65	0.67	0.70	0.72	0.75

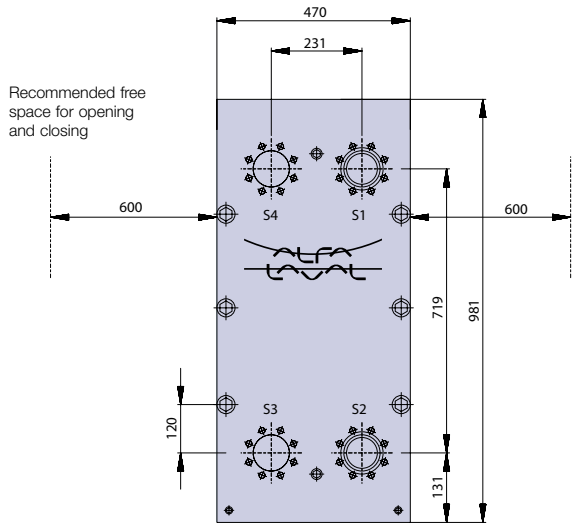

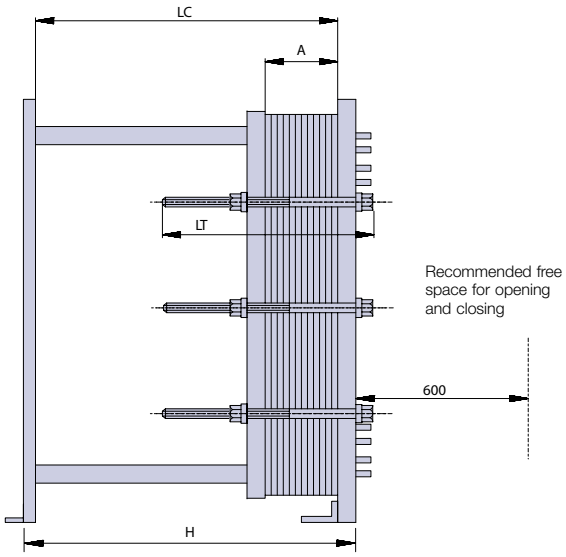

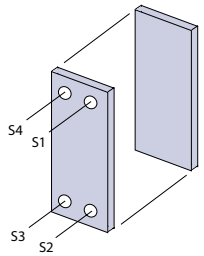

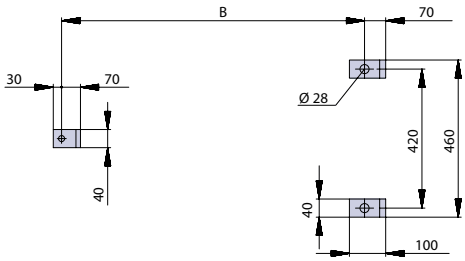

N° of cassettes, 0.6 mm			< 16	< 29	< 64	< 102	< 152	< 219
DIMENSIONS	A	mm	96	174	384	612	912	1314
	Lc	mm	500	650	900	1250	1600	2100
	Lt	mm	450	450	750	1050	1650	1950
	H	mm	590	740	990	1340	1690	2190
	B	mm	505	655	905	1255	1605	2105
	Connection	mm	DN 100	DN 100	DN 100	DN 100	DN 100	DN 100
DATA	V_{H_2O}	dm^3	8.8	17	39.1	63.0	94.5	136.7
	V_{NH_3}	dm^3	9.4	17.6	39.7	63.6	95.1	137.3
	W_0	kg	390	442	590	751	968	1240

S1 Outlet water
S2 Inlet water
S3 Outlet refrigerant
S4 Inlet refrigerant
Ti Water inlet temperature
Tc Condensing temperature
Qn Nominal capacity
Wn Water nominal flow
$\Delta p\ H_2O$ Water pressure drop
W_0 Operating weight
$V\ H_2O$ Water volume
$V\ NH_3$ Ammonia volume

N° of cassettes			20	30	40	50	60	70	80	90
Cooling tower	Qn	kW	390	600	810	1020	1230	1440	1650	1850
Ti = 29.5°C	Wn	m^3/h	56,0	86.1	116.3	146.4	176.5	206.7	236.8	265.5
Tc = 38.5°C	$\Delta p\ H_2O$	bar	0.78	0.80	0.82	0.84	0.86	0.89	0.92	0.94

City water	Qn	kW	400	620	830	1050	1260	1480	1690	1910
Ti = 15°C	Wn	m^3/h	49.1	76.1	101.8	128.8	154.5	181.5	207.3	234.3
Tc = 25°C	$\Delta p\ H_2O$	bar	0.62	0.65	0.65	0.67	0.68	0.71	0.72	0.75

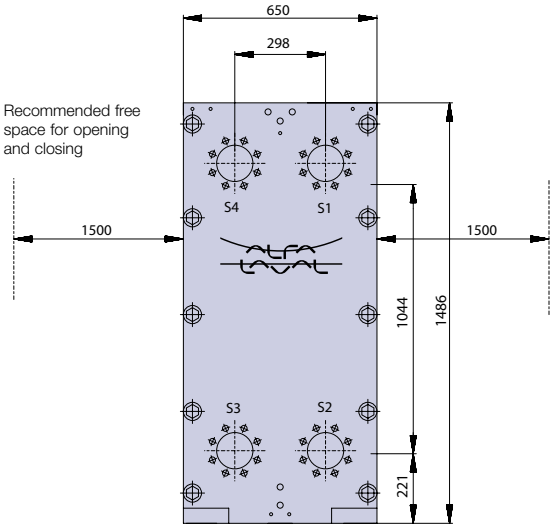

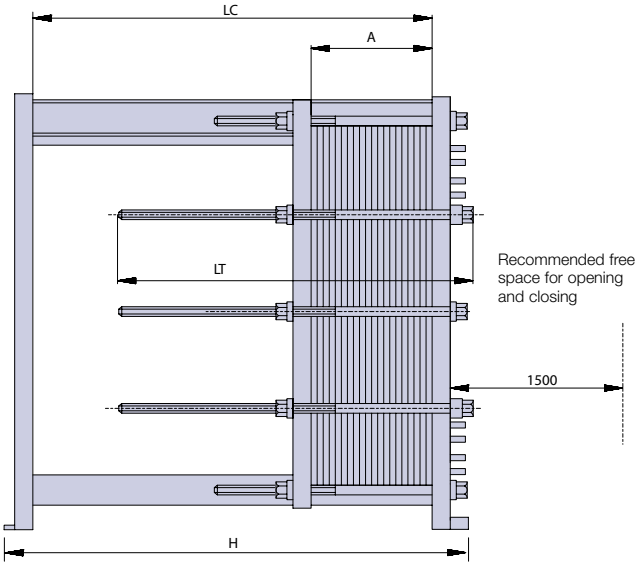

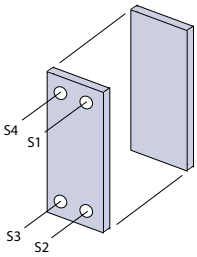

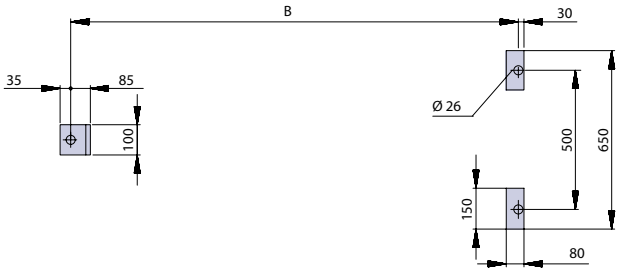

N° of cassettes, 0.6 mm			< 37	< 66	< 94	< 121	< 178	< 215
	A	mm	229	409	583	750	1100	1333
	Lc	mm	900	1200	1500	1800	2400	2800
	Lt	mm	750	1050	1350	1650	2250	2850
	H	mm	1200	1500	1800	2100	2700	3100
	B	mm	1095	1395	1695	1995	2595	2995
	Connection	mm	DN 150	DN 150	DN 150	DN 150	DN 150	DN 150
	V_{H_2O}	dm^3	44.4	81.3	116.8	151.1	224.8	270.5
	V_{NH_3}	dm^3	45.7	88.2	118.1	152.4	226.1	271.8
	W_0	kg	1440	1670	1890	2110	2600	2860

S1 Outlet water
S2 Inlet water
S3 Outlet refrigerant
S4 Inlet refrigerant
Ti Water inlet temperature
Tc Condensing temperature
Qn Nominal capacity
Wn Water nominal flow
$\Delta p\ H_2O$ Water pressure drop
W_0 Operating weight
$V\ H_2O$ Water volume
$V\ NH_3$ Ammonia volume

T20-BW FS

N° of cassettes			20	30	40	50	60	70	80	90
Cooling tower	Qn	kW	600	1100	1300	1600	1900	2200	2500	3000
Ti = 29.5°C	Wn	m^3/h	79.5	172.2	172.2	212.0	251.7	291.5	331.2	397.5
Tc = 38.5°C	$\Delta p\ H_2O$	bar	0.49	0.93	0.54	0.53	0.52	0.53	0.53	0.62
City water	Qn	kW	750	1200	1600	2000	2300	2500	2700	3100
Ti = 15°C	Wn	m^3/h	107.3	147.2	228.9	286.2	282.1	306.6	331.2	380.2
Tc = 25°C	$\Delta p\ H_2O$	bar	0.88	0.73	0.97	0.97	0.68	0.61	0.56	0.59

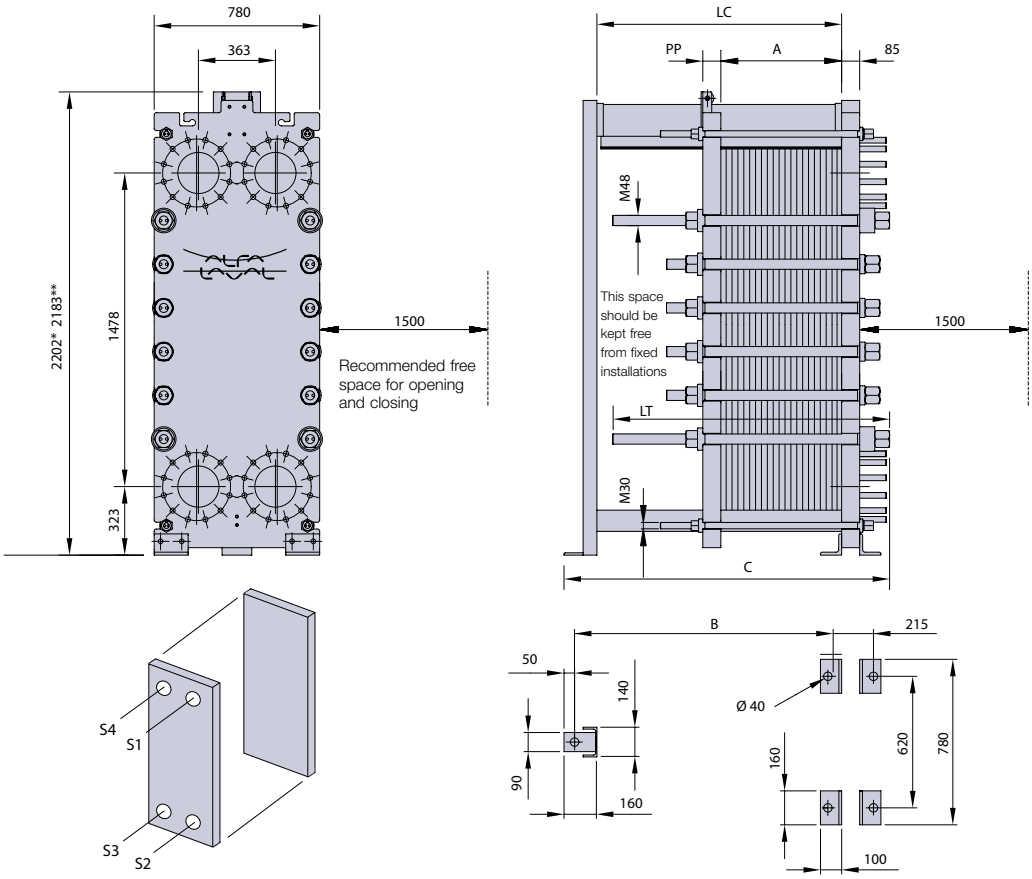

N° of cassettes, 0.6 mm			< 28	< 55	< 111	< 166	< 221	< 276
DIMENSIONS	A	mm	177	344	691	1045	1373	1714
	Lc	mm	900	1200	1800	2400	3000	3600
	Lt	mm	750	1050	1650	2250	2850	3450
	C	mm	1290	1590	2190	2790	3390	3990
	B	mm	945	1245	1845	2445	3045	3645
	Connection	mm	DN 200	DN 200	DN 200	DN 200	DN 200	DN 200
DATA	V_{H_2O}	dm^3	62.2	132.4	263.4	396.8	520.8	649.5
	V_{NH_3}	dm^3	71.5	134.7	265.7	399.1	523	651.8
	W_0	kg	2494	2852	3566	4233	4997	5639

S1 Outlet water
S2 Inlet water
S3 Outlet refrigerant
S4 Inlet refrigerant
Ti Water inlet temperature
Tc Condensing temperature
Qn Nominal capacity
Wn Water nominal flow
Δp H20 Water pressure drop
W_0 Operating weight
V H_20 Water volume
V NH_3 Ammonia volume

N° of cassettes			20	30	40	50	60	70	80	90
Cooling tower	Qn	kW	840	1230	1620	2010	2400	2790	3180	3570
Ti = 29.5°C	Wn	m^3/h	114.8	235.4	310	384.6	459.2	533.9	608.5	683.1
Tc = 38.5°C	$\Delta p\ H_2O$	bar	0.74	0.78	0.77	0.79	0.79	0.80	0.79	0.78

City water	Qn	kW	850	1240	1640	2030	2420	2820	3210	3600
Ti = 15°C	Wn	m^3/h	121.6	177	234.6	290.4	346.2	403.5	459.3	515.1
Tc = 25°C	$\Delta p\ H_2O$	bar	0.40	0.42	0.45	0.47	0.48	0.51	0.55	0.57

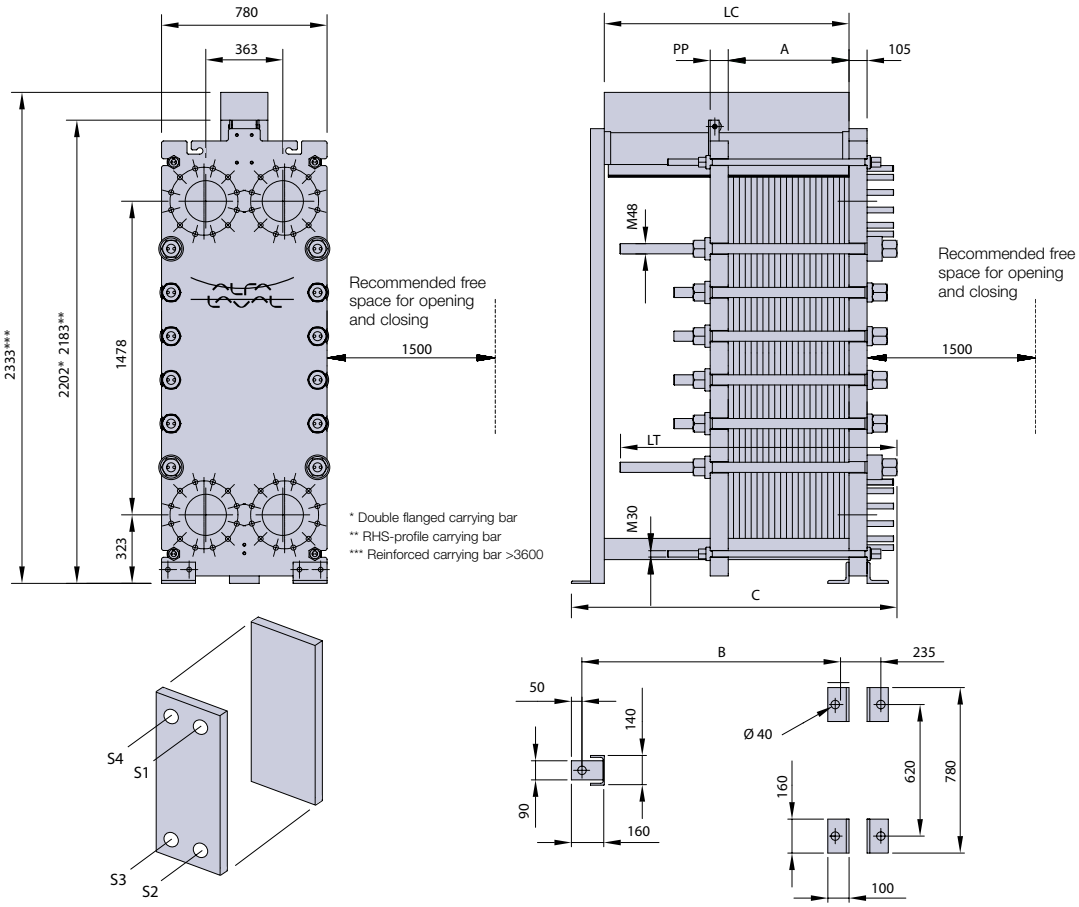

N° of cassettes, 0.6 mm			< 25	< 50	<99	< 148	< 197	< 246
	A	mm	229	409	583	750	1100	1333
	Lc	mm	900	1200	1800	2400	3000	3600
	Lt	mm	750	1050	1650	2250	2850	3450
	C	mm	1290	1590	2190	2790	3390	3990
	B	mm	945	1245	1845	2445	3045	3645
	Connection	mm	DN 200	DN 200	DN 200	DN 200	DN 200	DN 200
	V_{H_2O}	dm^3	84.4	176.2	356	535.8	715.6	895.5
	V_{NH_3}	dm^3	88.1	179.8	359.7	539.5	719.3	899.2
	W_0	kg	2490	2870	3600	4320	5070	5860

S1 Outlet water
S2 Inlet water
S3 Outlet refrigerant
S4 Inlet refrigerant
Ti Water inlet temperature
Tc Condensing temperature
Qn Nominal capacity
Wn Water nominal flow
Δp H20 Water pressure drop
W_0 Operating weight
V $H_2$0 Water volume
V NH_3 Ammonia volume

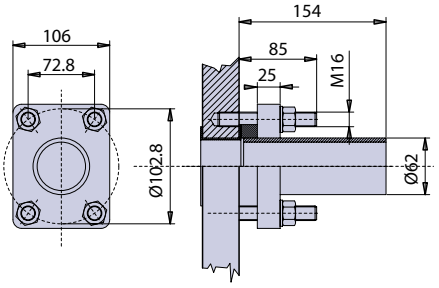

Connections S1, S2, S3 and S4 for M6-MW.
Design pressure 16/25 bar

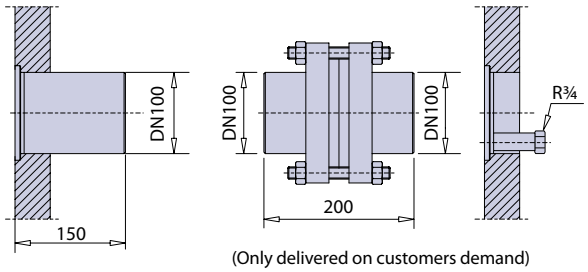

Connections S1, S2, S3 and S4 for M10-REF.
Design pressure 25 bar or 40 bar

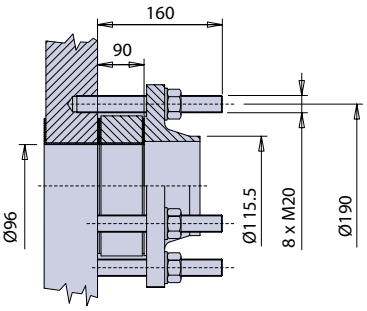

Connections S1, S2 for M10-BW.
Design pressure 25 bar

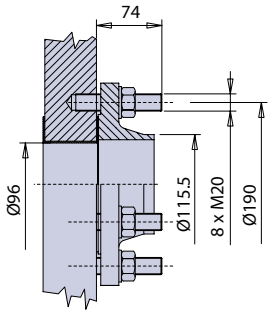

Connections S3 and S4 for M10-BW.
Design pressure 25 bar

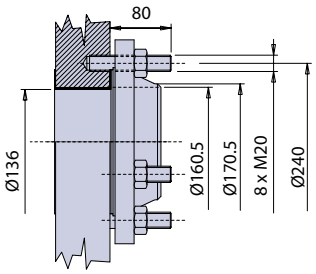

Connections S1, S2, S3 and S4 for MK15-BW.
Design pressure 16 bar

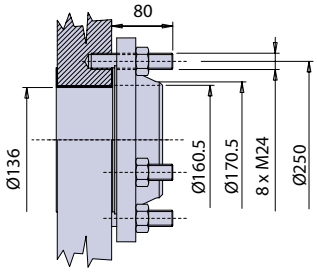

Connections S1, S2, S3 and S4 for MK15-BW.
Design pressure 25 bar

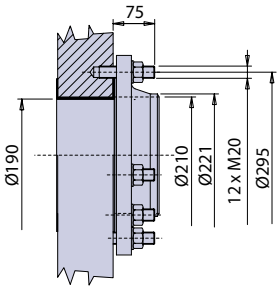

Connections S1, S2, S3 and S4 for T20-BW/T20-MW.
Design pressure 16 bar

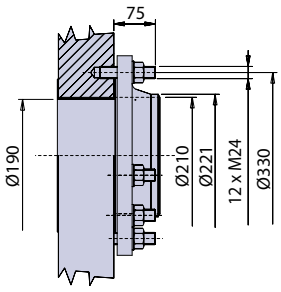

Connections S1, S2, S3 and S4 for T20-BW/T20-MW.
Design pressure 25 bar

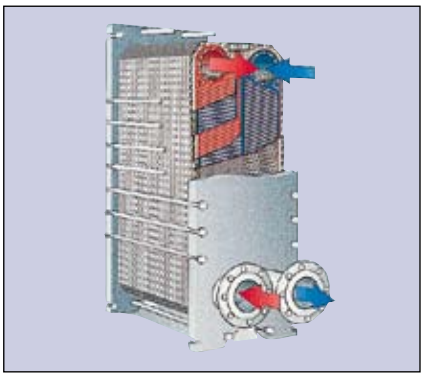

The all-welded plate heat exchanger consists of a plate pack of herringbone patterned metal plates with portholes for passage of the two fluids. The heat transfer takes place through the thin plates in stainless steel, titanium or SMO and it is a highly efficient heat exchange technique.

The AlfaRex TM10-B ammonia evaporator and condenser in a chiller heat pump system with ammonia as refrigerant installed in a Danish research institute. The system was built by Sabroe.

The AlfaRex does not only influence on size and weight but owing to its small refrigerant volume and gas-tightness it also responds to the rising demands for security and reduced environmental influence.

All-welded plate heat exchanger

The Alfa Laval all-welded plate heat exchanger AlfaRex consists of corrugated plates that are laser-welded together one by one in alternative grooves to form a plate pack. The plate pack is assembled between a frame plate and pressure plate and secured with tightening bolts. Extended connections are located in the frame cover with linings welded to the plate pack.

Applications

The AlfaRex offers the gasket free solution for the extreme demands applied to heat exchangers in refrigeration circuits with both flooded flow and dry expansion systems. The AlfaRex is specifically designed for aggressive media, ammonia, and carbon dioxide and for use of the new HCFC and HFC refrigerants. The unit can handle temperatures from -50 to 350ºC (-58 to 660ºF) and pressures up to 40 barg (580 psig). Typical duties are evaporator, condenser, cascade cooler, desuperheater, liquid subcooler or oil cooler in both residential and industrial air conditioning and refrigeration plants. The AlfaRex is also used as heat exchanger in absorption systems.

The technology

The plate pack is welded in only two directions (x and y), in the plane of the plates, which allows free expansion and contraction of the entire plate pack in the third direction (z), along the length of the plate pack. Through this patented method the AlfaRex can cope with fluctuations in temperature and pressure, it endures minimum 20,000 temperature cycles with amplitude of 90ºC and a temperature gradient of 5ºC per second.

Advantages

By using the corrugated plate heat exchanger concept, a high turbulent flow is created with low fouling tendencies and the AlfaRex becomes very efficient regarding heat transfer. This means that the AlfaRex has a compact design and installation is easy, the hold up volume is reduced and it requires very little maintenance. In comparison with a Shell & Tube heat exchanger, the AlfaRex offers several advantages:

- a more compact design that minimizes installation costs
- no corrosion
- efficient heat transfer
- reduced maintenance
- lower refrigerant volume
- absolute gasket free heat exchanger

Features

Besides different press pattern and various plate materials, the AlfaRex offers multiple pass arrangement. These features contribute to a flexible heat exchanger design.

Plate modules and connection arrangements

AlfaRex is assembled in modules of 10, which means that for every 10 plates there will be five channels for the brine flow with connections in S3/S4 as standard, and four channels for the refrigerant flow with connections in S1/S2 as standard. In order to improve fatigue performance all connections have Bellow type lining. The model TM10-B is manufactured with maximum 20 modules per unit, the model TM20-B is manufactured with maximum 30 modules per unit.

The following plate materials are standard:

- AISI 316
- SMO

Easy cleaning with Cleaning-In-Place

The all-welded construction makes the AlfaRex suitable for Cleaning-In-Place (CIP). The cleaning operation is fast and efficient and obtained by the turbulent flow created in the channels together with a chemical cleaning liquid. A mobile CIP unit could be docked to the heat exchanger and CIP liquid circulated.

Guarantee

The guarantee for the AlfaRex is valid 18 months from the delivery date or 12 months for the unit in operation. The guarantee is not valid if the heat exchanger is operated under conditions other than those specified. It is very important that the unit have been installed and set up according to the instructions.

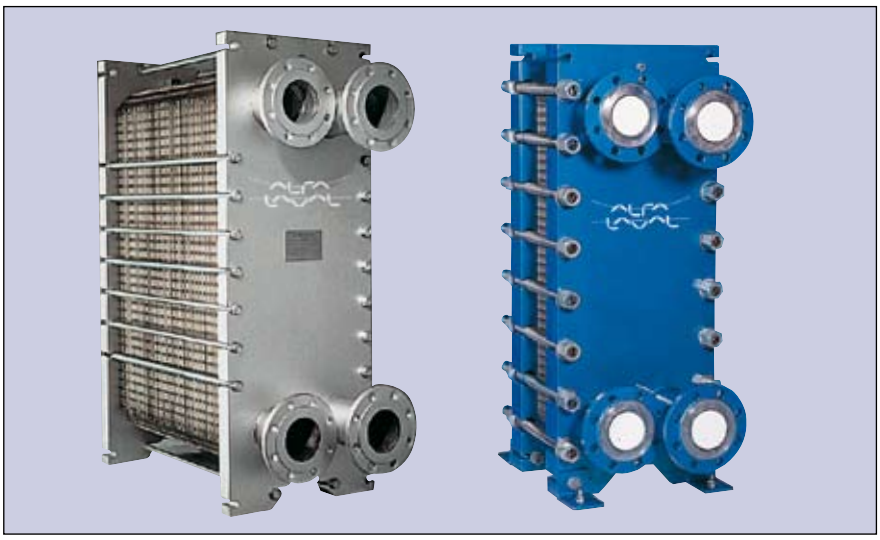

Models		TM10	TM20
FDR			
Max. design pressure / Test pressure	bar	36/51.5	on request
Standard temperature	°C	-10/160	on request
Design temperature	°C	-50/50	on request
FTR			
Max. design pressure / Test pressure	bar	43/61.5	on request
Standard temperature	°C	-10/160	on request
Design temperature	°C	-50/50	on request
FFR			
Max. design press. / Test press. gasket side	bar	n/a	25/35.8
Max. design press. / Test press. welded side	bar	n/a	-10/160
Design temperature	°C	n/a	-50/50
FKR			
Max. design press. / Test press. gasket side	bar	n/a	40/57.2
Max. design press. / Test press. welded side	bar	n/a	-10/160
Design temperature	°C	n/a	-50/50
FNR			
Max. design press. / Test press. gasket side	bar	n/a	40/57.2
Max. design press. / Test press. welded side	bar	n/a	-10/160
Design temperature	°C	n/a	-50/50

AISI 316 - 0.6 mm			
Max. design pressure	bar	43	36.5
Max. test pressure	bar	61.5	51.6
Module weight	kg	17.3	58.1
AISI 316 - 0.8 mm			
Max. design pressure	bar	43	43
Max. test pressure	bar	61.5	61.50
Module weight	kg	21.6	72.7
254 SMO - 0.6 mm			
Max. design pressure	bar	43	on request
Max. test pressure	bar	61.5	on request
Module weight	kg	19.2	on request
Titanium- 0.6 mm			
Max. design pressure / Max. test pressure	bar	19/27.2	17/24.3
Module weight	kg	9.72	32.7
Titanium - 0.8 mm			
Max design pressure / Max. test pressure	bar	28/40	18/25.7
Module weight	kg	12.2	40.9

Area / Plate module	m^2	2,056	8,4
Volume / 10 plate	l	HW 2.5 / HG 3.8	HW 2.5 / HG 3.8
Free channel	mm	2.95	3.0

All technical data refers to SPVC.
For other PVC code please contact Alfa Laval support.

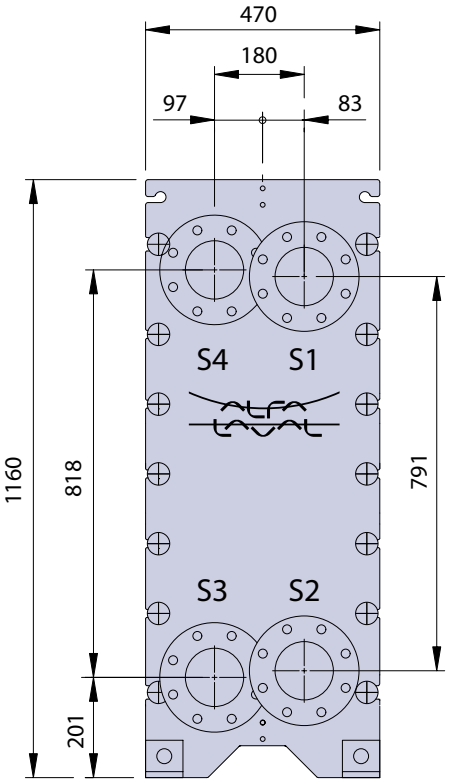

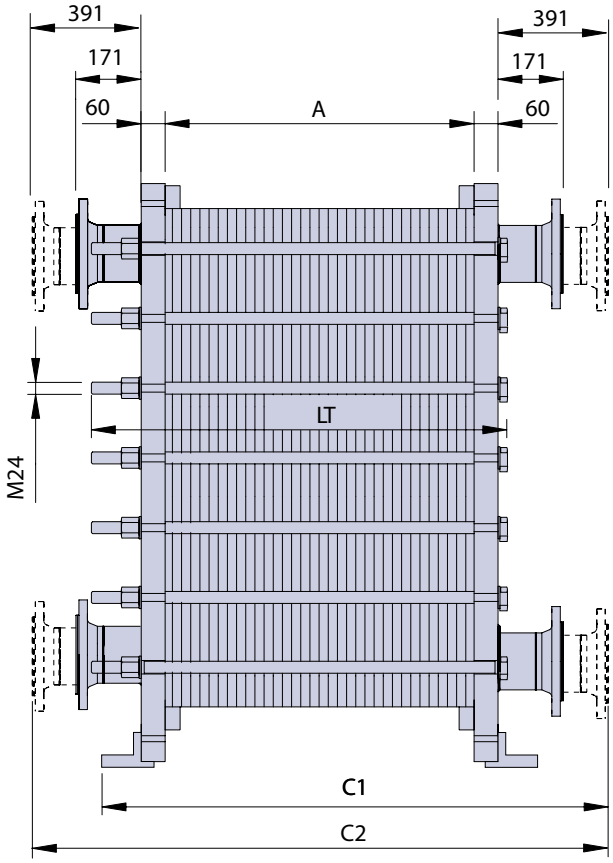

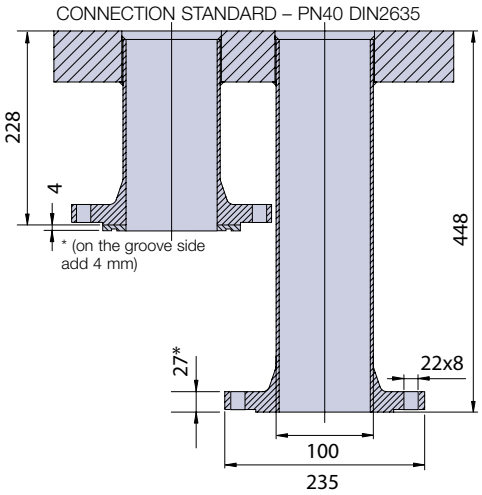

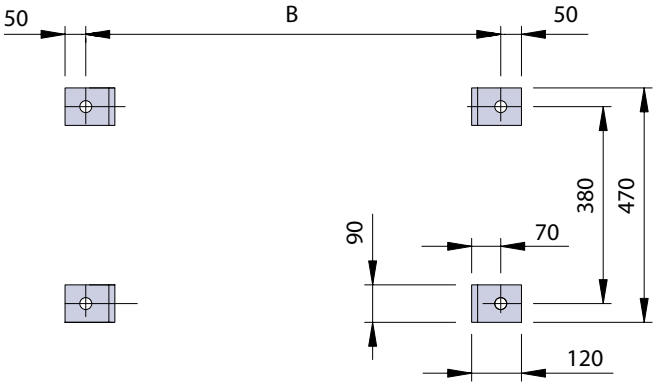

N° of modules			1	< 4	< 7	< 10	< 13	< 16	< 19	20
DIMENSIONS	A	mm	30.9	92.7	185	278	371	463	556	618
	Lt	mm	315	315	405	500	595	685	780	840
	B	mm	291	353	445	538	631	723	816	878
	C1	mm	666	728	820	913	1006	1099	1191	1253
	C2	mm	931	993	1085	1178	1271	1363	1456	1518
	Connection	mm	100	100	100	100	100	100	100	100

S1 Connection for refrigerant
S2 Connection for refrigerant
S3 Connection for water
S4 Connection for water

S1/S2 Connection for HW channel
S3/S4 Connection for HG channel

N No. of modules
Max 20 modules per unit

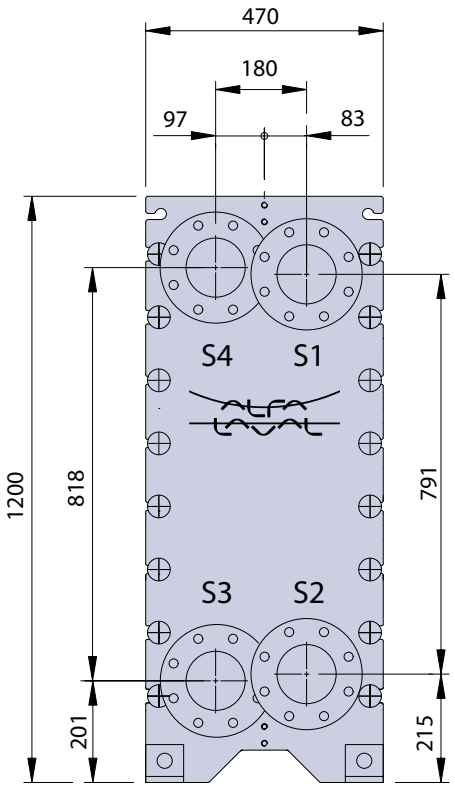

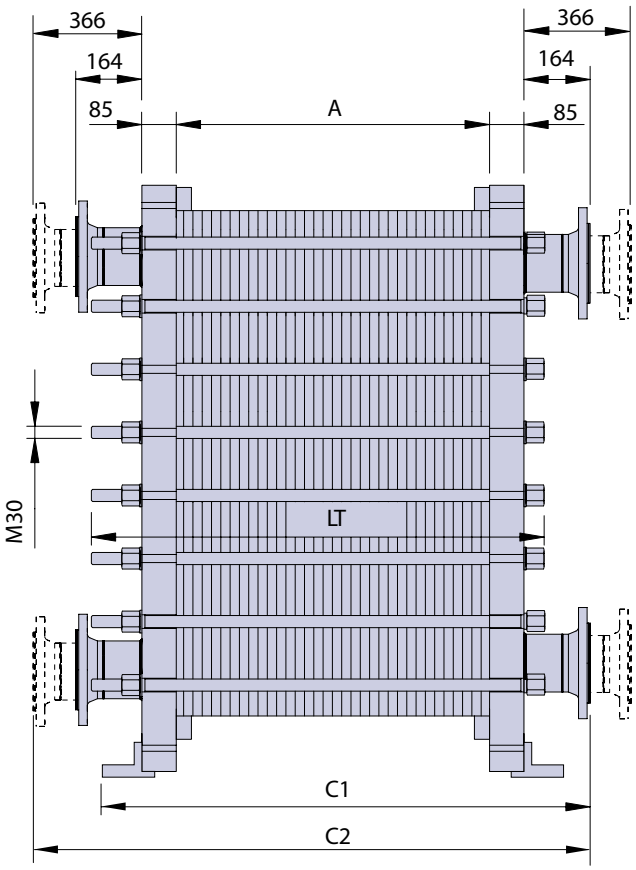

CONNECTION STANDARD – PN40 DIN2635

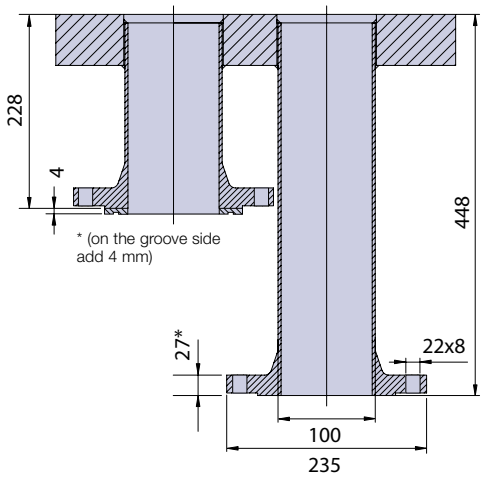

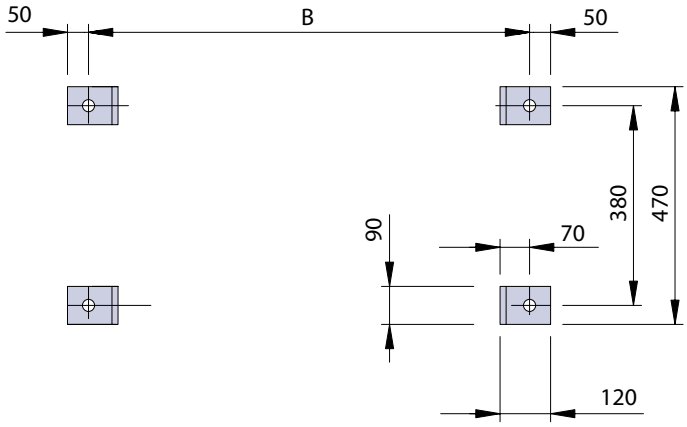

N° of modules			1	< 4	< 7	< 10	< 13	< 16	< 19	20
DIMENSIONS	A	mm	30.9	92.7	185	278	371	463	556	618
	Lt	mm	315	315	405	500	595	685	780	840
	B	mm	341	403	495	588	681	773	866	928
	C1	mm	691	753	845	938	1031	1123	1216	1278
	C2	mm	931	993	1085	1178	1271	1363	1456	1518
	Connection	mm	100	100	100	100	100	100	100	100

S1 Connection for refrigerant
S2 Connection for refrigerant
S3 Connection for water
S4 Connection for water

S1/S2 Connection for HW channel
S3/S4 Connection for HG channel

N No. of modules
Max 20 modules per unit

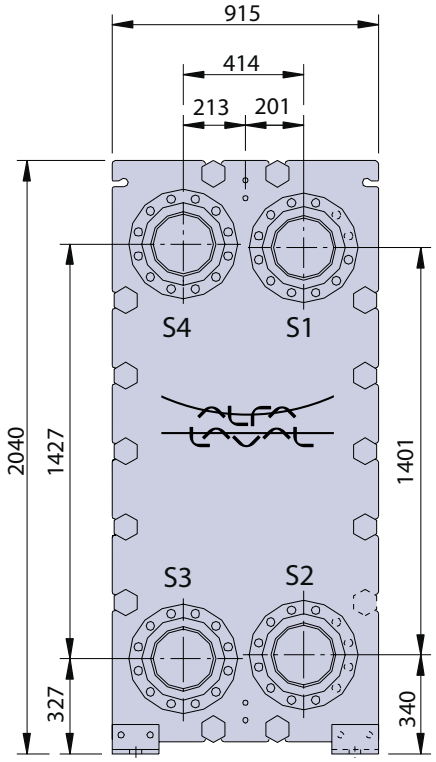

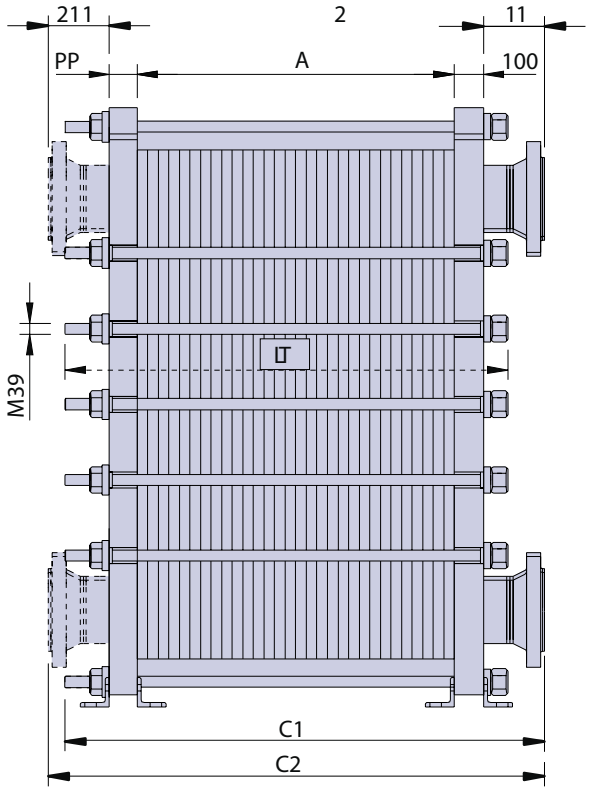

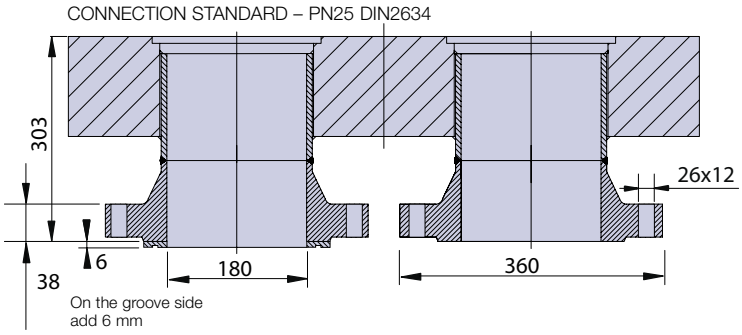

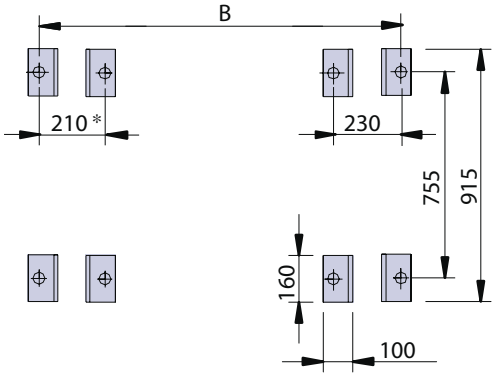

Anzahl der Module			1	< 8	< 9	< 16	< 18	< 24	< 26	30
DIMENSIONS	A	mm	36.4	255	291	546	619	837	910	1092
	Lt	mm	450	750	750	1050	1050	1350	1350	1650
	B*	mm	346	565	601	856	929	1147	1220	1402
	C1	mm	580	880	880	1180	1180	1480	1480	1780
	C2	mm	580	880	910	1180	1239	1480	1530	1780
	Connection	mm	200	200	200	200	200	200	200	200

S1 Connection for refrigerant
S2 Connection for refrigerant
S3 Connection for water
S4 Connection for water

S1/S2 Connection for HW channel
S3/S4 Connection for HG channel

N No. of modules
* When 4 holes, PP, add 20 mm

Max 30 modules per unit

TM20-B FKR

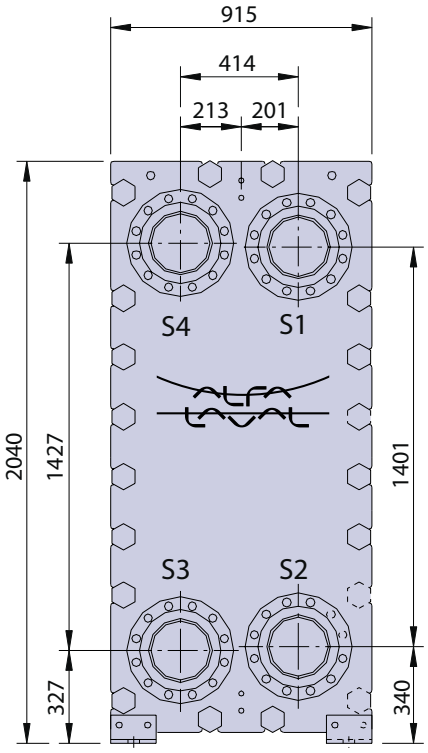

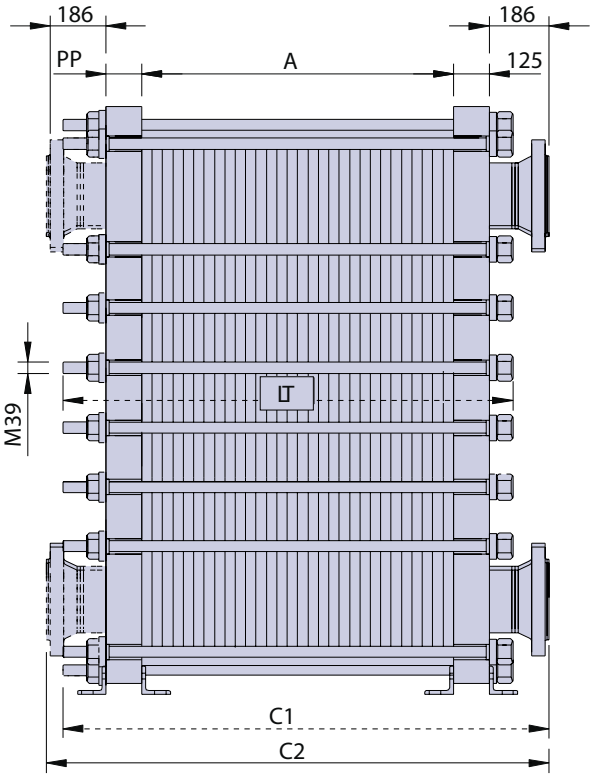

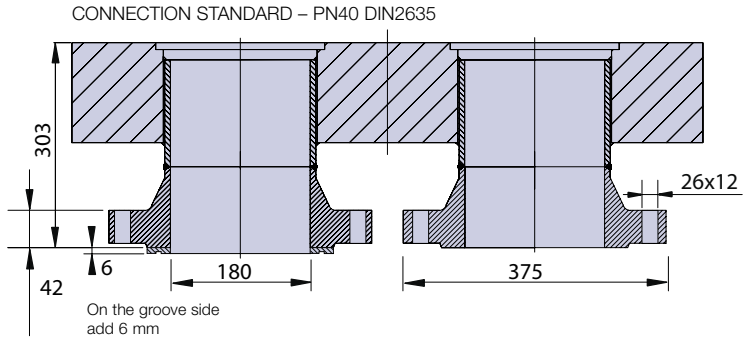

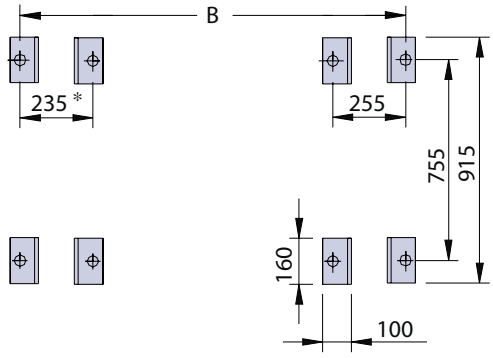

N° of modules			1	< 7	< 8	< 15	< 16	< 23	< 25	30
DIMENSIONS	A	mm	36.4	218	255	510	546	801	874	1092
	Lt	mm	450	750	750	1050	1050	1350	1350	1650
	B*	mm	396	578	615	870	907	1161	1234	1452
	C1	mm	550	850	850	1150	1150	1450	1450	1750
	C2	mm	660	850	875	1150	1165	1450	1494	1750
	Connection	mm	200	200	200	200	200	200	200	200

S1 Connection for refrigerant
S2 Connection for refrigerant
S3 Connection for water
S4 Connection for water

S1/S2 Connection for HW channel
S3/S4 Connection for HG channel

N No. of modules
* When 4 holes, PP, add 20 mm

Max 30 modules per unit

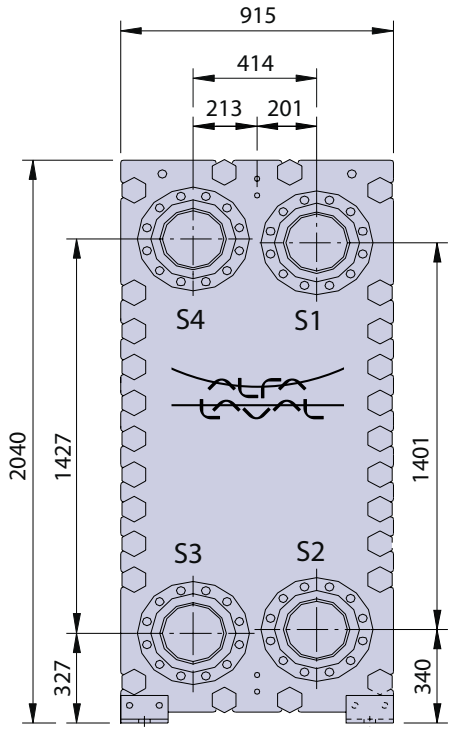

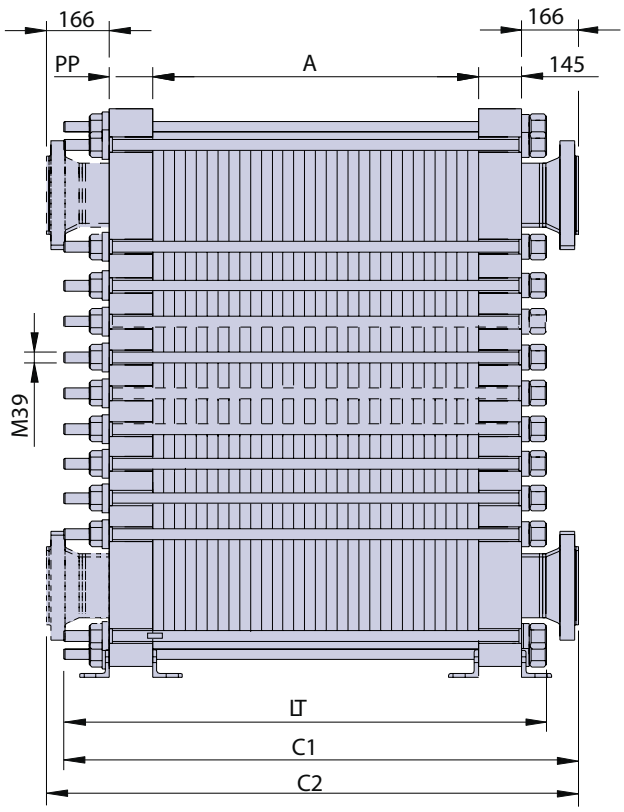

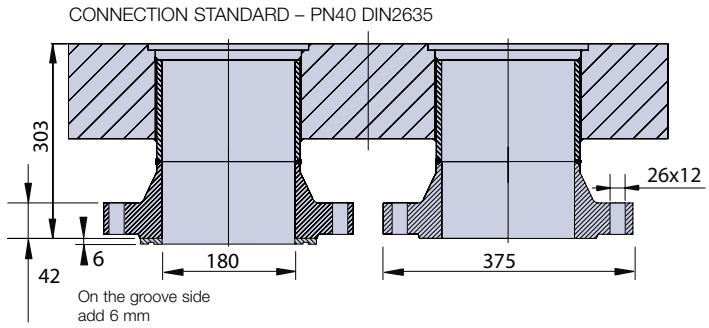

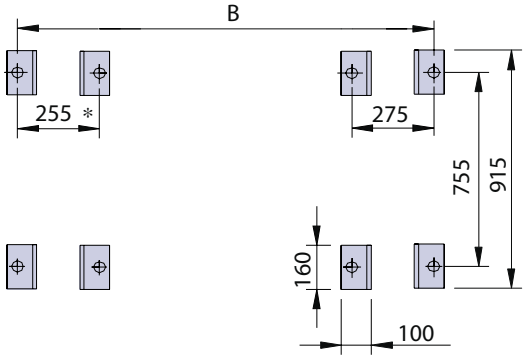

Anzahl der Module			1	< 6	< 7	< 15	< 23	< 24	30
DIMENSIONS	A	mm	36.4	182	218	510	801	837	1092
	Lt	mm	750	750	750	1050	1350	1350	1650
	B*	mm	436	582	618	909	1201	1237	1492
	C1	mm	830	830	830	1130	1430	1430	1730
	C2	mm	830	855	855	1130	1430	1455	1730
	Connection	mm	200	200	200	200	200	200	200

S1 Connection for refrigerant
S2 Connection for refrigerant
S3 Connection for water
S4 Connection for water

S1/S2 Connection for HW channel
S3/S4 Connection for HG channel

N No. of modules
* When 4 holes, PP, add 20 mm

Max 30 modules per unit

Note

Alfa Laval in brief

Alfa Laval is a leading global provider of specialized products and engineered solutions.

Our equipment, systems and services are dedicated to helping customers to optimize the performance of their processes. Time and time again.

We help our customers to heat, cool, separate and transport products such as oil, water, chemicals, beverages, foodstuffs, starch and pharmaceuticals.

Our worldwide organization works closely with customers in almost 100 countries to help them stay ahead.

How to contact Alfa Laval

Up-to-date Alfa Laval contact details for all countries are always available on our website at www.alfalaval.com

ERC00041EN 0609